xerox WorkCentre 3550

700N00217
WWW.XEROX.COM

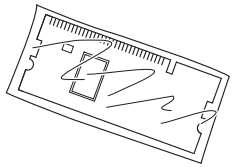

1a

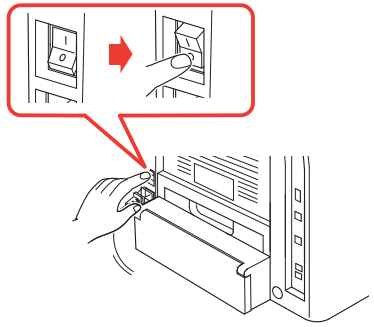

b

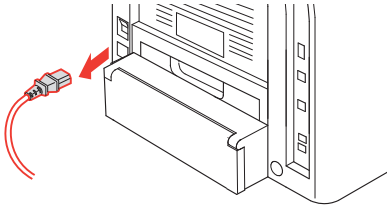

2

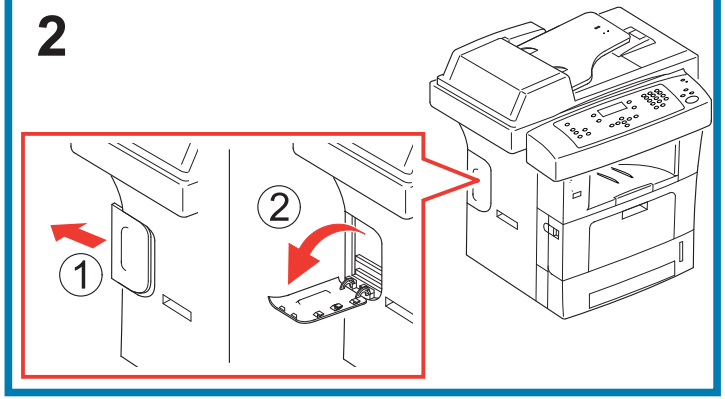

3

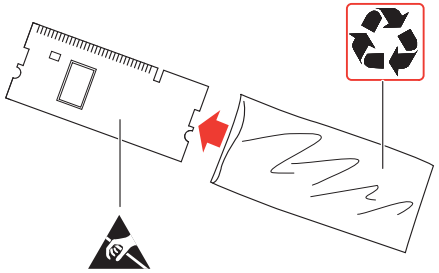

4a

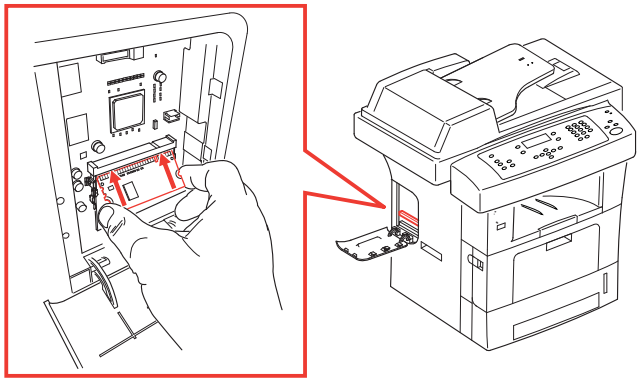

b

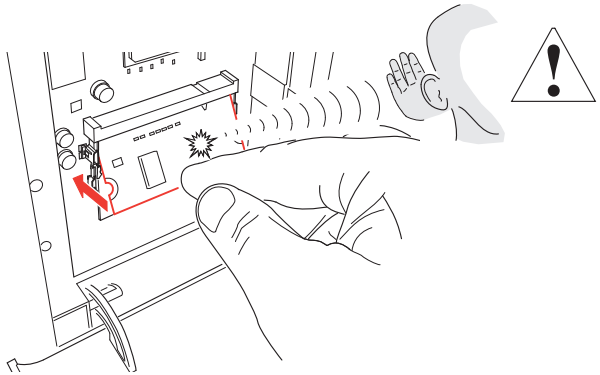

5

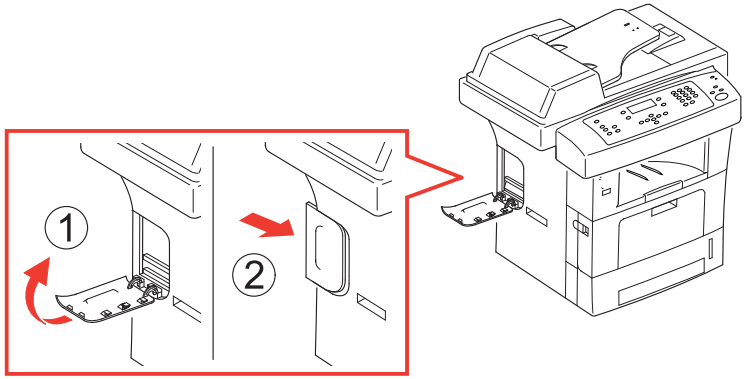

6a

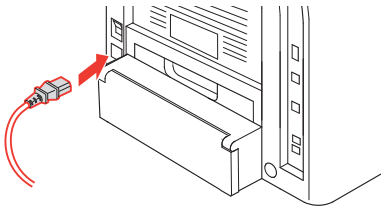

b

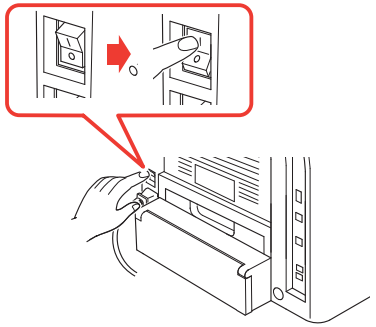

© Copyright 2010 by Xerox Corporation. All rights reserved.