DocuTech 128/155/180 Highlight Color

Installation Planning Guide

Version 51.xx
September 15, 2006

Prepared by:
Xerox Corporation
Global Knowledge and Language Services
800 Philips Road Bldg. 845-17S
Webster, New York 14580
USA

Printed in the United States of America.

Changes are periodically made to this document. Changes, technical inaccuracies, and typographic errors will be corrected in subsequent editions.

Table of contents

Safety notes

1 Introduction

2 Planning responsibilities

3 Printer components and specifications

4 Prepare for installation

5 Installation

6 Maintenance

Safety notes

Please read the following instructions carefully before planning your install and/or operating the DocuTech 128/155/180 HighLight Color printer. Refer to them as needed to ensure the safe installation and operation of your equipment.

The safety testing and performance of this product have been verified using Xerox materials only.

Your Xerox DocuTech 128/155/180 HighLight Color printing system and its supplies have been designed and tested to meet strict safety requirements. These include safety agency examination and approval, and compliance to established environmental standards.

Follow all warnings and instructions marked on or supplied with the product.

Symbology

Various symbols are used on the printer and in the documentation.

The symbol on the printer that indicates a hot surface is shown in the following figure.

Figure i-1. Hot Surface symbol

WARNING: *Warnings indicate possible serious personal injury if you do not strictly follow the practice, procedure, condition, or statement that follows the WARNING.*

CAUTION: *Cautions indicate that possible system damage or data loss will occur if you do not carefully follow the practice, procedure, condition or statement that follows the CAUTION.*

European Union declaration of conformity

Approvals and certification

The CE marking applied to this product symbolizes Xerox Europe Declaration of Conformity with the following applicable Directives of the European Union as of the dates indicated below.

- **January 1, 1995**: Council Directive 73/23/EEC amended by Council Directive 93/68/EC, approximation of the laws of the member states related to low voltage equipment.
- **January 1, 1996**: Council Directive 89/336/EC, approximation of the laws of the Member States related to electromagnetic compatibility.

A full declaration, defining the relevant directives and referenced standards can be obtained from your Xerox Ltd. representative.

Changes or modifications to this equipment not specifically approved by Xerox Europe may void user's authority to operate the equipment. Shielded cables must be used with this equipment to maintain compliance with the EMC Directive (89/336/EEC).

WARNING: *This is a Class A product. In a domestic environment this product may cause radio interference in which case the user may be required to take adequate measures.*

Electricity at Work Regulation - UK

The Electricity at Work Regulation applies only to England and Wales.

The regulation

The Electricity at Work Regulation 1989 came into force in England and Wales on the 1 April 1990. This 1989 Regulation places a duty on all employers and self-employed persons to ensure the electrical systems in their premises are constructed, maintained and operated in such a manner as to prevent, so far as reasonably practical, danger. This includes ensuring all electrical equipment connected to such electrical systems are safely constructed, maintained and operated.

All Xerox equipment has been designed to exacting safety standards. They have all undergone a variety of stringent safety tests including earth bond, insulation resistance and electrical strength tests. Xerox Europe manufacturing plants have been awarded ISO 9000 quality certification and are subject to regular audits by the British Standards Institution or equivalent national standards body.

Xerox equipment that has been properly and regularly serviced and maintained should not have to undergo additional specific safety tests pursuant to the 1989 Regulation. Customers wishing to complete safety testing should contact Xerox Europe Technical

Centre for advice prior to any test implementation. The address of the Xerox Technical Centre is provided in the previous section, European Union declaration of conformity.

Xerox equipment should, however, be properly and regularly serviced and maintained at all times.

Check your understanding

Please review the questions and answers that follow to ensure that you understand the Electricity at Work Regulation in England and Wales.

Question **What is the Electricity at Work Regulation?**

Answer The Electricity at Work Regulation 1989 came into force in England and Wales on 1 April 1990. This 1989 Regulation places a duty on **all employers and self-employed persons** to ensure the electrical systems in their premises are constructed, maintained and operated in such a manner as to prevent, so far as reasonably practicable, danger. This includes ensuring all electrical products connected to such electrical systems are safely constructed, maintained and operated.

Question **Does Xerox Europe comply with the Electricity at Work Regulation?**

Answer The regulation places a duty on **all employers and self-employed persons** to ensure the electrical systems in their premises are effectively safe. This regulation does not impose on, amongst others, **manufacturers or suppliers** of such electrical systems. However, rest assured that all Xerox equipment which Xerox Europe and its authorized distributors supply to customers conforms with all the relevant safety legislation and standards.

Question **Is Xerox equipment safe?**

Answer All Xerox equipment supplied by Xerox Europe and its authorized distributors conforms to all relevant safety legislation and standards.

Question **Is the Xerox equipment in my premises safe?**

Answer All Xerox equipment supplied by Xerox Europe and its authorized distributors conforms to all relevant safety legislation and standards. However, like all electrical equipment, it has to be regularly serviced and maintained by competent persons. Xerox Europe Customer Service Engineers ensure Xerox equipment is serviced and maintained to exacting Xerox safety standards. If you would like your Xerox equipment to be serviced and maintained to such high standards, please contact your local Xerox Europe Customer Service Organization. They will be pleased to assist you.

Question **Does the Xerox equipment in my premises comply with the Electricity at Work Regulations?**

Answer All employers and self-employed persons must ensure that the electrical systems in their premises are safe. This will include

ensuring Xerox equipment in such premises is safe. Xerox Europe's Product Safety function has prepared a guide which contains a list of tests which may be completed by your Xerox Europe Customer Service Organization. **THESE TESTS MUST BE CARRIED OUT ONLY BY PERSONS WHO POSSESS THE RELEVANT SKILL, KNOWLEDGE AND EXPERIENCE TO CARRY OUT SUCH TESTS.**

Please contact the Xerox Europe Customer Service Organization for further information.

THE USE OF INAPPROPRIATE TEST PROCEDURES AND TEST EQUIPMENT MAY PROVIDE MISLEADING RESULTS AND MAY CAUSE DEATH, PERSONAL INJURY AND/OR DAMAGE TO PROPERTY.

Question **I would like to carry out my own safety tests on the Xerox temperament in my premises.**

Answer You may, of course, request such tests as you deem necessary to satisfy yourself that your Xerox equipment is safe. Your Xerox Europe Customer Support will be pleased to advise you on such testing.

Question **I require records of all tests.**

Answer After safety testing, your Xerox Europe Customer Service Engineer will provide you with a certificate which details the results of all tests completed. In the event of any defect being noted, the Xerox equipment will be switched off and disconnected from the supply until the defect has been corrected. You will be advised of such action to enable such defects to be corrected.

NOTE: *It is your responsibility to ensure that your Xerox equipment is safe at al times.*

Additional queries

Please contact the Xerox Europe Technical Centre or your authorized Xerox representative if you have any queries regarding the information provided in this document.

Electrical safety

Attention to the following requirements ensures the safe operation of your equipment.

Printer

USA/Canada The DocuTech 128/155/180 system requires a 208/240 VAC outlet, 4-wire circuit, and has two power cords (one dedicated 30 Amp and one dedicated 50 Amp).

Europe The printer requires a 380-415 VAC outlet and one power cord (one dedicated 30 Amp circuit). The equipment must be connected to a grounded main outlet.

Printer cautions

Ensure that the power connection for your printer satisfies these requirements.

- The power receptacles (NEMA 14-50R and NEMA 14-30R, USA only) for the printer must meet the requirements stated on the data plate on the rear of the printer.
- The power cords require single service, dedicated lines.
- The socket outlet shall be installed near the equipment within reach of the 10 ft. (3 m) cable and shall be easily accessible.
- Use the power cable that is supplied with your printer and controller. Do not use an extension cord, or remove or modify the power cord plug.
- Plug the power cable directly into a correctly grounded electrical outlet. If you are not sure whether or not an outlet is correctly grounded, consult a qualified electrician.
- Do **not** use an adapter to connect the printer to an electrical outlet that lacks a ground connection terminal.
- The power cord is the disconnect device for this printer.
- Do **not** override or disable electrical or mechanical interlocks.
- Do **not** push objects into slots or openings on the printer. Electrical shock or fire may result.
- Do **not** obstruct ventilation openings. These openings prevent overheating of the printer.

Controller

USA/Canada The controller requires a dedicated 115 VAC 20 Amp grounded receptacle.

Europe The controller requires a 220-240V, 13 or 10 Amp grounded receptacle.

Controller cautions

Follow all safety cautions, warnings, and instructions marked on the controller.

- Ensure that the voltages and frequency rating of the power receptacle match the electrical rating label on the equipment.
- Do not make electrical or mechanical modifications to the equipment.
- Use the power cable that is supplied with your controller. Do not use an extension cord, or remove or modify the power cord plug. If the plug must be changed, a qualified electrician must install the plug correctly on the power cord.
- Plug the power cable directly into a correctly grounded electrical outlet or into the power strip that is connected to this outlet. If you are not sure whether or not the outlet is correctly grounded, consult a qualified electrician.
- Do **not** use an adapter to connect the controller to an electrical outlet that lacks a ground connection terminal.
- The power switch functions as a standby type of device only. The power cord serves as the primary disconnect device for the system.
- Do **not** push objects into slots or openings on the equipment. Electrical shock or fire may result.
- Do **not** obstruct ventilation openings. These openings prevent overheating of the controller.

Printer or controller - emergency power off

If any of the following conditions occur, turn off the equipment immediately and disconnect the power cable from the electrical outlet. Contact an authorized Xerox Service Representative to correct the problem:

- The power cable is damaged or frayed.
- A wall panel circuit breaker, fuse, or other safety device has been tripped.
- Liquid is spilled into the equipment.
- The equipment is exposed to water damage or flood.

- Any part of the equipment is physically damaged.
- The equipment emits unusual odors, or makes unusual noises.

NOTE: *The only method to remove all power from the printer is to disconnect the power cable from the electrical outlet. If the cable is hardwired to the outlet, the switch or breaker must be used to isolate the power supply from the printer.*

Printer - ozone information

This product produces ozone during normal operation. The ozone produced is dependent on print volume and is heavier than air. Install the system in a well ventilated room with the minimum cubic size requirements listed below. Providing the correct environmental parameters will ensure that the concentration levels meet safe limits. The minimum cubic volume requirement is: 1,765 cubic feet (50 cubic meters).

To determine if the room has the required volume to meet the ozone requirement, the length of the room multiplied by its width and height should be equal to or greater than the cubic volume listed above. If you need additional information about ozone, please request the Xerox publication *Facts About Ozone* (part number 601P64653) by calling 1-800-828-6571 in the United States and Canada. In Xerox Europe countries and DMO, call the local welcome centre.

Printer - laser safety

CAUTION: *The use of controls, adjustments or performance of procedures other than those specified in this guide may result in hazardous light exposure.*

This equipment complies with international safety standards and is certified as a Class 1 Laser Product. The laser danger labels on the system are for Xerox service representatives and are on or near panels or shields that must be removed with a tool. With specific regard to lasers, the equipment complies with laser product performance standards set by governmental, national, and international agencies as a Class 1 Laser Product. It does not emit hazardous light, as the beam is totally enclosed during all phases of customer operation and maintenance.

Printer - operational safety

WARNING: *Improper connection of the equipment grounding conductor may result in risk of electrical shock.*

Safety Quality Standards

The equipment is manufactured under a BS5750 Quality system accepted by the British Standards Institution.

Other National Standards

The DocuTech 128/155/180 system is also certified in compliance with applicable standards by various national bodies.

Do these

To ensure the continued safe operation of your printer, follow these safety guidelines at all times:

- Always connect equipment to a correctly grounded power outlet. If in doubt, have the outlet checked by a qualified electrician.
- Always follow all warnings and instructions that are marked on or are supplied with the equipment.
- Always exercise care when moving or relocating the equipment. Please contact your local Xerox Service Department to arrange relocation of the printer.
- Always locate the printer on a solid support surface (not on plush carpet) that has adequate strength to support the weight of the printer.
- Always locate the printer in an area that has adequate ventilation and room for servicing. Refer to the space requirements in Chapter 4*, Prepare for Installation.*
- Always use materials and supplies that are specifically designed for your Xerox equipment. Use of unsuitable materials may result in poor performance and possibly a hazardous situation.

Do not do these

To ensure the continued safe operation of your printer:

- Never use an adapter plug to connect equipment to a power source that lacks a ground connection terminal.
- Never obstruct ventilation openings. They are provided to prevent overheating.
- Never push objects of any kind into the ventilation openings.
- Never attempt any maintenance function that is not specifically described in the DocuTech 128/155/180 HighLight Color system documentation.
- Never remove any covers or guards that are fastened with screws. There are no operator serviceable areas within these covers.
- Never locate the printer near a radiator or any other heat source.

- Never override or “cheat” any of the electrical or mechanical interlock devices.
- Never operate the equipment if you notice unusual noises or odors. Disconnect the power cord from the power outlet and call the Xerox Welcome Center.

Your Xerox DocuTech 128/155/180 HighLight Color system is certified, manufactured, and tested in compliance with strict safety and radio frequency interference regulations. Any unauthorized alteration that includes the addition of new functions or the connection of external devices may invalidate this certification. Please contact your local Xerox representative or the Xerox Welcome Center for a list of approved accessories.

Welcome Center phone numbers:

- USA: (800) 821-2797
- Canada: (800) 939-3769

Additional information - Europe

If you need any additional safety information concerning the equipment or the Xerox supplied materials, you may call the following number: 01707 353434.

Additional information - all other areas

If you need any additional safety information concerning the equipment or the Xerox supplied materials, please contact the Xerox Welcome Center.

For further information

For more information on Environment, Health and Safety in relation to this Xerox product and supplies, please contact the following customer help lines:

- Europe: +44 1707 353434
- USA: 1 800 8286571
- Canada: 1 800 8286571

1 Introduction

The DocuTech 128/155/180 HighLight Color Installation Planning Guide contains information on preparing for the delivery and installation of the DocuTech 128/155/180 HighLight Color printing system.

About the printer

This product, with its various configurations, is a black plus one color, single-pass spot color printing system. The DocuTech high volume printer configuration is offered in three speeds: 128 ppm, 155 ppm, and 180 ppm. The production publishing configuration offers a print speed of 180 ppm.

The DocuTech Highlight Color printer prints high quality, high resolution documents in simplex (one-sided) or duplex (two-sided) at high production speeds from LCDS, PostScript, PCL, IPDS, and other data streams.

About this guide

This guide is intended for the person responsible for coordinating the installation of the Xerox DocuTech 128/155/180 HighLight Color system and controller at your site.

If you are a lead operator, or your job involves some programming or systems administration tasks, as well as operating the DocuTech 128/155/180 HighLight Color system, use the on-line help system and the other documents in the Xerox Document Services Platform Series to supplement the information in the *DocuTech 128/155/180 HighLight Color Installation Guide*.

Contents

This section lists the contents of this guide.

- “Introduction” gives a basic overview of the Installation Guide and its contents. It also contains information on requirements and certifications required by USA and Canadian regulations.

- “Safety Notes” explains the various symbols, Cautions, and Warnings pertaining to the safe use and operation of the DocuTech 128/155/180 HighLight Color system. It also contains information on requirements and certifications required by the European Union Declaration of Conformity and the UK Electricity at Work Regulation.
- “Planning Responsibilities” provides an overview of the planning process involved when installing a DocuTech 128/155/180 HighLight Color printer.
- “Printer components and specifications” describes the components and options available for the Xerox DocuTech 128/155/180 HighLight Color printing system.
- “Installation” describes the activities performed by you and Xerox during the installation of the Xerox DocuTech 180/155/128 HighLight Color hardware and software components.
- “Maintenance” describes the support services available to you, and contains a list of the commonly used consumable supplies for the DocuTech 128/155/180 HighLight Color printer.

Requirements

Service requirements

In the event of equipment malfunction, all repairs should be performed by Xerox or an authorized Service agent. It is the responsibility of users requiring service to report the need for service to Xerox or to an authorized agent.

Service can be obtained by calling:

USA: 1-800-821-2797

Canada: 1-800-939-3769

All other countries: contact your local service representative

Remote Services

Remote Services (RS) offers:

- Data Transmission (DT)
- Download Software Updates (DSU)
- Remote Desktop Management (RDM)
- Automated Meter Read (AMR)

The features of remote services include:

- Always connected – always ON
- A common remote support and service workflow that provides a consistent and quality customer support experience
- A real-time view of your system status
- Improved product development and support
- Improved customer productivity

For more information, refer to the Remote Services User Guide.

Industry Canada requirements

The Load Number (LN) assigned to each terminal device denotes the percentage of the total load to be connected to a telephone loop that is used by the device, to prevent overloading. The termination on a loop may consist of any combination of devices subject only to the requirement that the total of the Load Numbers of all the devices does not exceed 100.

For service in Canada call: (800) 939-3769.

Electromagnetic compatibility

United States of America

This equipment has been tested and found to comply with the limits for a Class A digital device, pursuant to Part 15 of the FCC Rules. These limits are designed to provide reasonable protection against harmful interference when the equipment is operated in a commercial environment. This equipment generates, uses, and can radiate radio frequency energy. If not installed and used in accordance with the instruction manual, it may cause harmful interference to radio communications. Operation of this equipment in a residential area is likely to cause harmful interference, in which case the user will be required to correct the interference at the user’s own expense.

Changes or modifications to this equipment not specifically approved by the Xerox Corporation may void the user’s authority to operate this equipment.

Shielded cables must be used with this equipment to maintain compliance with FCC regulations.

This Class “A” digital apparatus complies with Canadian ICES-003.

European Union

WARNING: *This is a Class A product. In a domestic environment, this product may cause radio interference, in which case the user may be required to take adequate measures.*

Changes or modifications to this equipment not specifically approved by Xerox Europe may void the user's authority to operate this equipment. Shielded cables must be used with this equipment to maintain compliance with the EMC Directive (89/336/EEC).

WARNING: *In order to allow this equipment to operate in proximity to Industrial, Scientific, and Medical (ISM) equipment, the external radiation from ISM equipment may have to be limited or special mitigation measures taken.*

Environmental information

Product Recycling and Disposal

If you are managing the disposal of your Xerox product, please note that the product may contain lead, mercury, perchlorate and other materials whose disposal may be regulated due to environmental considerations in certain countries or states. The presence of lead, mercury or perchlorate is fully consistent with global regulations applicable at the time that the product was placed on the market.

North America

Xerox operates an equipment takeback and reuse/recycle program. Contact your Xerox sales representative (1-800-ASK-XEROX) to determine whether this Xerox product is part of the program. For more information about Xerox environmental programs, visit **[www.xerox.com/environment/]** or for recycling and disposal information, contact your local authorities.

In the United States, you may also refer to the Electronic Industries Alliance web site: **[www.eiae.org]**.

European Union

Some equipment may be used in both a domestic/household and a professional/business application.

Domestic/Household Environment

Application of this symbol on your equipment is confirmation that you should not dispose of the equipment in the normal household waste stream.

In accordance with European legislation end of life electrical and electronic equipment subject to disposal must be segregated from household waste.

Private households within EU Member States may return used electrical and electronic equipment to designated collection facilities free of charge. Please contact your local disposal authority for information.

In some Member States when you purchase new equipment your local retailer may be required to take back your old equipment free of charge. Please ask your retailer for information.

Professional/Business Environment

Application of this symbol on your equipment is confirmation that you must dispose of this equipment in compliance with agreed national Procedures.

In accordance with European legislation, end-of-life electrical and electronic equipment subject to disposal must be managed within agreed procedures.

Prior to disposal please contact your local dealer or Xerox representative for end-of-life take back information.

Other Countries

Contact your local waste authorities and request disposal guidance.

2 Planning responsibilities

This chapter is an overview of the planning process involved when installing a DocuTech 128/155/180 HighLight Color printer.

Before installation, you must select and prepare an appropriate location for the printing system and ordered supplies. This chapter helps you accomplish these tasks by providing the following information:

- A summary of Xerox responsibilities and your responsibilities. Note that some areas overlap and are joint responsibilities.
- A checklist of installation planning activities.

For information on the printer and controller power requirements, refer to the Prepare for installation chapter in this guide.

Installation planning responsibilities

Xerox responsibilities

Your Xerox representative's responsibilities prior to, during, and after installation of the DocuTech 128/155/180 HighLight Color printer are to oversee site selection, installation, training, and service as described in the following bulleted list.

Site Selection

- Assist in site selection.
- Inspect and approve the site.
- Discuss the customer’s workflow and how the hardware will be used to meet particular tasks, such as inline processing or post print processing equipment (e.g. binders or sealers).

Installation

- Schedule the delivery of the hardware.
- Monitor installation activities.
- Assist in ordering any supplies required.
- Install the DocuTech printer.

Training

- Provide initial operations training.
- Provide information and assistance in registering for Xerox Customer Education classes.

Service

- Review preventive maintenance schedules and service procedures.
- Provide ongoing DocuSP controller and DocuTech printer

maintenance.

- Assist in resolving hardware and software problems.

Customer responsibilities

Your responsibilities prior to, during, and after installation of the DocuTech printer are to oversee site personnel, site selection and preparation.

Site personnel

- Identify a person at your site to be the primary interface with Xerox.

Site selection and preparation

- Select and prepare the site for the DocuTech printer installation. The following electrical and network services are required:
  - Refer to the chapter, “Select and prepare an installation site”, for the necessary electrical requirements for your site.
  - One 10BaseT, 100BaseT, 1000BaseT Ethernet connection for the controller. For additional details, refer to the chapter, “Select and prepare an installation site”.
- Inform the Xerox representative of any post-print processing that is planned to be included with the system.

Training

- Select personnel to train.
- Set up training schedule.

Client workstations

Make sure all client workstations that will be submitting print jobs have the proper hardware, operating system, and networking software required by the DocuTech printer as client platforms.

Applications

Work with your Xerox systems analyst to determine requirements for initial applications.

Installation planning checklist

To aid you in planning for printer installation, the following checklist contains the tasks that you and your service representative must complete before installation. If you have questions about any of these activities, contact your sales or service representative. Use the time frames in this checklist as guidelines. It is best to consult your suppliers to determine the required lead times.

Table 2-1. Installation planning checklist

Week	Activity	Responsibility	Date completed
-4	• Select location for the printing system. • Order additional sets of documentation, as necessary. • Register for Xerox Customer Education classes and order tutorials, as necessary. • Schedule printer delivery.	Customer Customer Customer and Xerox Xerox	_____ _____ _____ _____

-3	• Schedule hardware delivery.
	• Prepare site:
	  • Ensure proper electrical outlets are installed.
	  • Install network to system location, if applicable.
	  • Install channel to system location, if applicable. Cables must be fully populated.
	  • Ensure proper operating environment.
		Customer and Xerox
		Customer
			_____
			_____
			_____
			_____
			_____

-2	• Inspect and approve site.
	• Order consumable supplies. Minimum supplies needed for installation:
	  • Paper (2 cartons)
	  • Developer (1 carton)
	  • Fuser lubricant (2 boxes)
	  • Dry ink (1 carton black, 1 carton color)
	
	After installation, you will need to establish a procedure for ordering supplies according to your ongoing production requirements.
		Xerox
		Customer and Xerox
			_____
			_____
			_____
			_____
			_____
			_____

-1	• Schedule operator training.	Customer and Xerox	_____

Week	Activity	Responsibility	Date completed
Install	• Ensure supplies are available.	Customer	_____
	• Ensure system administrators are available during software installation.	Customer	_____
	• Provide applicable completed worksheets from the **Getting Ready for the DocuSP Installation** document.	Customer	_____
	• Install printing system hardware and software.	Xerox	_____
	• Have operators available for training.	Customer	
	• Check documentation and software kits for completeness.	Customer	_____
	• Have test jobs ready to run.	Customer	_____
	• Provide stocks needed for default input configuration.	Customer	_____
	• Obtain and enable software licenses for third party software. Xerox licenses are part of this installation.	Customer	_____ _____
Post-install	• Become familiar with support services available.	Customer	_____
	• Establish supplies maintenance procedure.	Customer	_____
	• Provide on-going system maintenance.	Customer and Xerox	_____
	• Order additional documentation as necessary.	Customer	_____ _____

3 Printer components and specifications

The printer processes the page images received from the controller and produces the printed output. This chapter describes the printer components and options available for this system.

Printer components

The printer components for the DocuTech 128/155/180 HighLight Color printing system will depend on whether the printing system is the high volume or production publisher version:

- Xerox DocuTech 128/155/180 HighLight Color high volume printing system
- Xerox DocuTech 180 HighLight Color production publisher printing system

The print engine is the same for both. However each system offers a different component configuration.

DocuTech 128/155/180 HLC printer

The standard components for this printing system are the print engine with the HLC module, the top tray, the two processor feeder trays (trays 1 and 2) that are part of the print engine, and the feeder/stacker module or modules.

The base configuration includes an inverter feeder/stacker (IFS) and one feeder/stacker module.

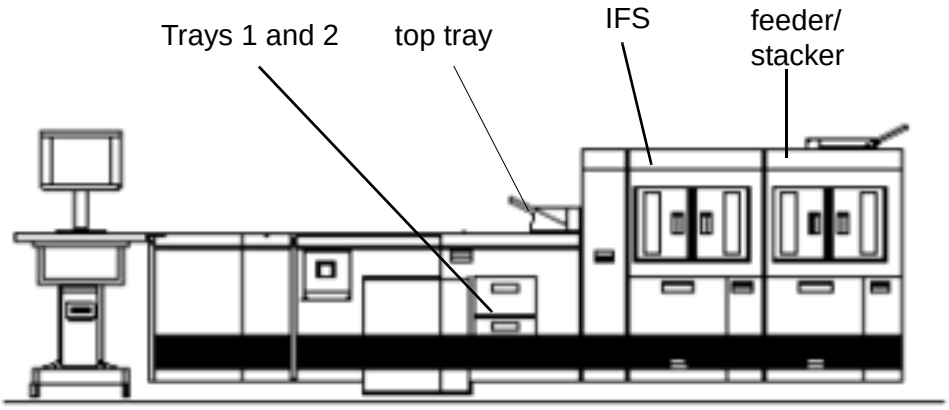

Optionally, up to two additional feeder/stacker middle modules (without the output tray) can be inserted after the inverter feeder/stacker. Also, an optional Bypass Transport module can be connected to the last feeder/stacker module for transitioning to third party finishing devices. If the Bypass Transport module is attached, then the maximum number of feeder/stackers that can be included in the configuration is two.

The printer provides control buttons and displays for basic printer functions and status information. Labels are located throughout the printer to assist you with a variety of tasks such as clearing a paper jam.

Inverter Feeder/Stacker (IFS)

The inverter portion of this module turns the paper over for two sided printing and allows for the proper collation of the print job. It directs the printed output to the output tray. Each module contains a single tray high capacity feeder (Tray 3) located at the bottom.

Feeder/Stacker

Each feeder/stacker module includes one high capacity feeder tray (Trays 4, 5 and 6) and one stacker bin. The high capacity feeder trays are located in the bottom half of the feeder/stacker. The high capacity stacker bins are located in the top half of the feeder/stacker.

DocuTech 180 HLC production publisher

The standard components for this publishing configuration are the print engine with the HLC module, the two processor feeder trays (trays 1 and 2) that are part of the print engine, an interposer with two feeder trays, and a finisher module.

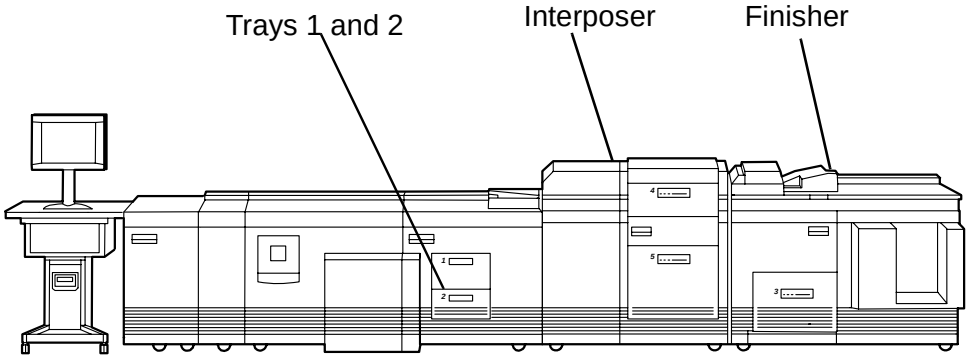

DPC0203A-TOR

The print engine is the same as the DT 128/155/180 HLC printer with the inverter feeder/stacker. It also provides control buttons and displays for basic printer functions and status information. Labels are located throughout the printer to assist you with a variety of tasks such as clearing a paper jam.

Interposer

The 2-tray interposer inserts sheets from Tray 4 to the finisher, bypassing the fuser. Tray 5 sheets can be fed to the printer or can insert sheets directly to the finisher.

Finisher

The finisher includes Tray 3 and also collates, stitches or binds print pages from the printer. The output is sent to the stacker or the top tray.

The additional bypass transport option

The bypass transport capability is available as an option in the Finisher module of the DocuTech 180 HLC publisher. It is also offered as an external module for the DocuTech 128/155/180 HighLight Color printer (with IFS and feeder/stacker). In this configuration, the Bypass Transport module is connected to the last feeder/stacker module in the printing system.

The bypass transport provides an interface between the printing system and your finishing accessories. This option enables third party finishing devices to interface directly with the printing system so that paper moves from the stacker to the finishing device. The bypass transport allows you to customize your printer for increased efficiency and specialized applications involving finishing.

NOTE: *A bypass transport must be installed for the printing system to support a third party finishing device. Finishing devices require separate power sources that are independent of the printing system.*

Function of the bypass transport

The bypass transport moves paper from the stacker and feeds directly to a third party finisher such as a stitcher, booklet maker, tape binder, and so on. By making selections on the user interface window, you can program the printer to send output to the bypass transport, which directs the output to the finishing equipment.

Paper stocks supported on bypass transport

The bypass transport accepts all paper stocks on which the printer can print, and it accommodates simplex and duplex printing.

4 Prepare for installation

This chapter assists you in selecting a suitable location for installing your DocuTech system. You should consider the following factors when deciding where to place the printer hardware components:

- Adequate work space and service clearance around the equipment
- Proximity to electrical and network connectors
- Security of the work area

You may need to place the system in an area where you can restrict access to it. This may be important if your personnel need to print confidential documents or if you are concerned with unauthorized use.

Space requirements - printer

This section describes the space requirements for installing one or more DocuTech printers.

Dimensions and weights of the printer components are listed in this section, along with diagrams, to help you visualize the sizes and total space requirements.

For information on clearance space and other space planning considerations, refer to the “Space planning guidelines” section of this chapter. Contact your service representative if you have questions not specifically addressed in this guide.

Printer configurations available

The DocuTech 180 HighLight Color production publisher is offered in the following standard configuration:

- Printer (HLC module and print engine) + 2-tray interposer + Finisher

The following configurations are available for the DocuTech 128/155/180 HighLight Color high volume printer:

- **Standard:** Printer (HLC module and print engine) + inverter feeder/stacker + 1 feeder/stacker
- **Optional:** Printer (HLC module and print engine) + inverter feeder/stacker + 2 feeder/stackers

- **Optional:** Printer (HLC module and print engine) + inverter feeder/stacker + 3 feeder/stackers
- **Optional:** Printer (HLC module and print engine) + inverter feeder/stacker + 2 feeder/stackers + bypass transport

NOTE: *The maximum number of modules allowed in any of the configurations is 4.*

Measurements and a top-view diagram for each of these configurations is provided on the following pages.

Printer configuration diagrams

DocuTech 180 HighLight Color publisher printer

The following provides space requirements for the DocuTech 180 HLC production publisher configuration.

Printer with interposer and finisher

The individual dimensions of the printer, the interposer and the finisher modules (installed with all front and rear covers) are as follows:

	Printer	HLC module	Interposer	Finisher
Width	78 in (198 cm)	23 in (58.4 cm)	46.5 in (118.1 cm)	56 in (142.2 cm)
Depth	42 in (106.6 cm) *	40 in (101.6 cm)	33 in (83.8 cm)	37.5 in (95.2 cm)
Height	41 in (104 cm)	41 in (104 cm)	49 in (124.4 cm)	48 in (122 cm)
Weight	1580 lbs (716.6 kgs)	365 lbs (165.5 kgs)	710 lbs (322 kgs)	1069 lbs (485 kgs)

* The printer depth without the front and rear covers is 34.8 in (88.3 cm)

- The space requirements for the controller stand are 30 x 30 in (76.2 x 76.2 cm).
- The minimum total space required for this configuration is 293.1 x 142.0 inches (744.5 cm x 360.6 cm), including service area. Refer to Figure 4-1.
- The total weight of the system is 3724 lbs (1689 kgs).

NOTE: *Not included in this weight is the controller stand or DocuSP controller.*

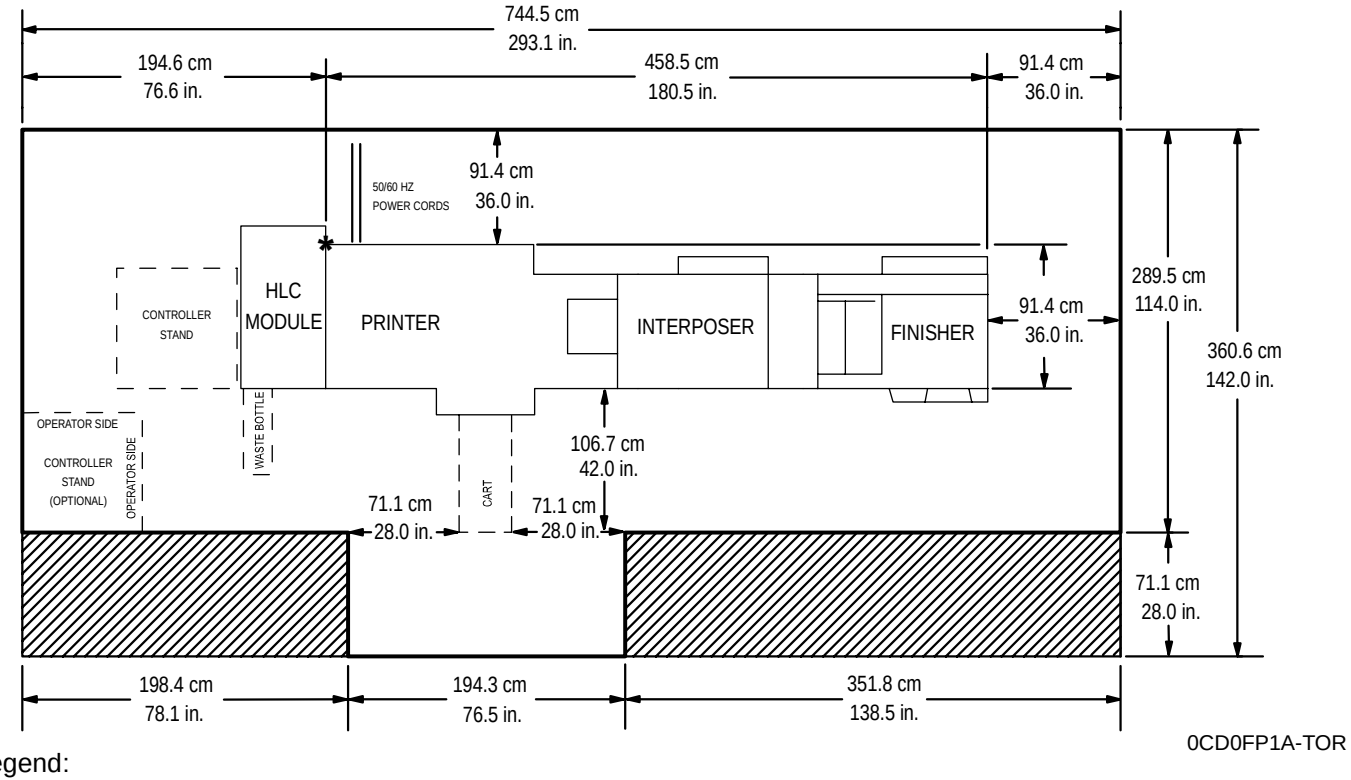

Legend:

* Base point for positioning print engine at installation

Figure 4-1. DT 180 HLC Production Publisher (including service area)

DocuTech 128/155/180 HighLight Color printer

The following provides space requirements for the four DocuTech 128/155/180 HLC high volume printer configurations.

(1) Printer/HLC with inverter feeder/ stacker and one feeder/stacker

The dimensions of the printer with the inverter feeder/stacker and one feeder/stacker (installed with all front and rear covers) are as follows:

	Printer	**HLC Module**	**Inverter feeder/ stacker**	**Feeder/ stacker**
Width	78 in (198 cm)	23 (58.4 cm)	42 in (106.6 cm)	32 in (81.2 cm)
Depth	42 in (106.6 cm) *	40 in (101.6 cm)	28 in (71 cm)	28 in (71 cm)
Height	41 in (104 cm)	41 in (104 cm)	58 in (147 cm)	64 in (162.5 cm)
Weight	1580 lbs (716.6 kgs)	365 lbs (165.5 kgs)	663 lbs (300.7 kgs)	521 lbs (236.3 kgs)

* The printer depth without the front and rear covers is 34.8 in (88.3 cm)

- The space requirements for the controller stand are 30 x 30 in (76.2 x 76.2 cm).
- The minimum total space required for this configuration is 264.6 x 142.0 inches (672 cm x 361 cm), including service area. Refer to Figure 4-2.
- The total weight of the system is 3129 lbs (1419.3 kgs).

NOTE: *Not included in this weight is the controller stand or DocuSP controller.*

(2) Printer/HLC with inverter feeder/ stacker and two feeder/stackers

The dimensions of the individual components for this configuration are shown in the chart above. The total dimensions of the printer with the inverter feeder/stacker and two feeder/stackers (installed with all front and rear covers) are as follows:

- Width: 207 inches (525.7 cm)
- Depth: 42 inches (106.6 cm)
- The minimum total space required for this configuration is 296.6 x 142.0 inches (753 x 361 cm), including service area. Refer to Figure 4-2.
- The total weight of the system is 3650 lbs (1655 kgs).

NOTE: *Not included in this weight is the controller stand or DocuSP controller.*

(3) Printer/HLC with inverter feeder/stacker and three feeder/ stackers

The dimensions of the individual components for this configuration are shown in the chart above. The total dimensions of the printer with the inverter feeder/stacker and three feeder/stackers (installed with all front and rear covers) are as follows:

- Width: 239 inches (607 cm)
- Depth: 42 inches (106.6 cm)
- The minimum total space required for this configuration is 328.6 x 142.0 inches (835 x 361 cm), including service area. Refer to Figure 4-2.
- The total weight of the system is 4171 lbs (1892 kgs).

NOTE: *Not included in this weight is the controller stand or DocuSP controller.*

(4) Printer/HLC with inverter feeder/stacker, two feeder/ stackers and bypass transport

The dimensions of the printer with the inverter feeder/stacker, two feeder/stackers and a bypass transport (installed with all front and rear covers) are as follows:

	Printer	**HLC Module**	**Inverter feeder/ stacker**	**Feeder/ stacker**	**Bypass transport**
Width	78 in (198 cm)	23 in (58.4 cm)	42 in (106.6 cm)	32 in (81.2 cm)	20 in (50.8 cm)
Depth	42 in (106.6 cm) *	40 in (101.6 cm)	28 in (71 cm)	28 in (71 cm)	28 in (71 cm)
Height	41 in (104 cm)	41 in (104 cm)	58 in (147 cm)	64 in (162.5 cm)	56 in (142 cm)
Weight	1580 lbs (716.6 kgs)	365 lbs (165.5 kgs)	663 lbs (300.7 kgs)	521 lbs (236.3 kgs)	176 lbs (79.8 kgs)

* The printer depth without the front and rear covers is 34.8 in (88.3 cm)

- The space requirements for the controller stand are 30 x 30 in (76.2 x 76.2 cm).
- The minimum total space required for this configuration is 284.6 x 142.0 inches (723 x 361 cm), including service area. Refer to Figure 4-2.
- The total weight of the system is 3826 lbs. (1735 kgs).

NOTE: *Not included in this weight is the controller stand or DocuSP controller.*

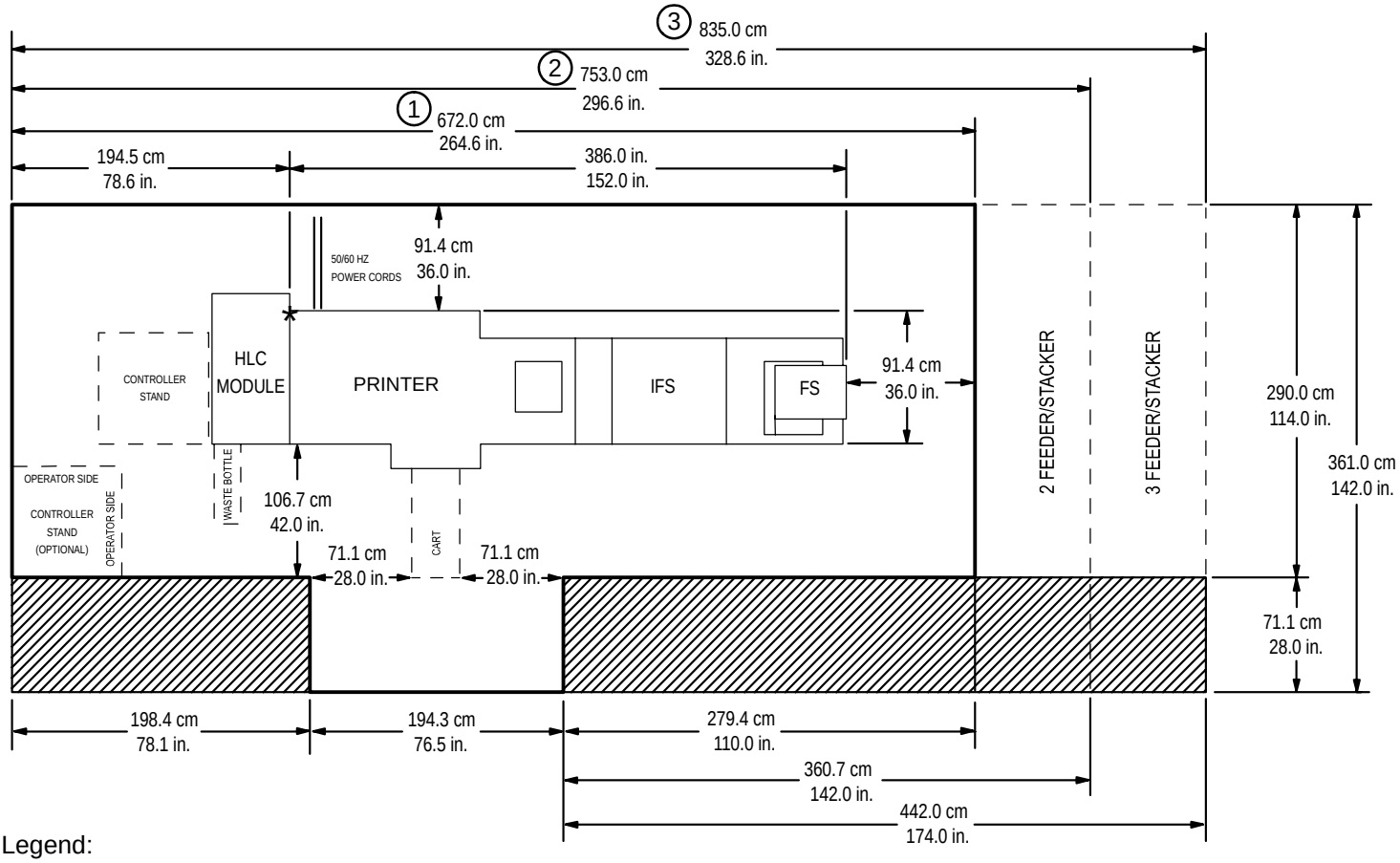

Legend:

* Base point for positioning print engine at installation

0CD0FP1C-SOR

Figure 4-2. Printer with inverter feeder/stacker and feeder/ stackers (including service area)

NOTE 1: *The greyed areas in the figure are not restricted and can be used for other purposes.*

CAUTION: *Make sure the service area around the entire system is clear and allows the CSE enough room to open module doors and cabinets.*

Space requirements - controller

The dimensions for the Controller Stand are 30 inches (76.2 cm) deep and 30 inches (76.2 cm) wide.

The operator should have 30 inches (76.2 cm) of space to stand when operating the system from the keyboard.

Bypass transport specifications

The bypass transport option, which enables you to add a third-party finishing device, is available as an external module for the DocuTech 128/155/180 HLC printer. This feature is also available within the Finisher module for the publisher printer configuration.

The bypass transport is installed by your service representative and remains permanently in place. You should not attempt to remove or reinstall it. The following is supported by the bypass transport:

- **Paper size and weight:** You can use all of the paper sizes and weights supported by the printer in the bypass transport.
- **Sheet exit orientation:** 1 to N (the same order in which sheets are fed from the printer), delivered face down.
- **Maximum throughput speed:** The bypass transport for the printer supports throughput speeds of up to 180 ppm (pages per minute). This rate is based on stocks up to 9 x 14.33 inches (229 x 364 mm) in length.
- **Sheet exit height:** 34 inches (86 cm) above the floor.

Bypass transport dimensions

The following pages contain information on dimensions, service access, and the paper path for the Bypass Transport module.

The Bypass Transport is 20.4 inches (518 mm wide) x 28.3 inches (719 mm) deep x 56.1 inches (1425 mm) high. Maintain the same service space around the transport as required by the printer.

Dimensions

The following figure shows the dimensions of the bypass transport from the right end view.

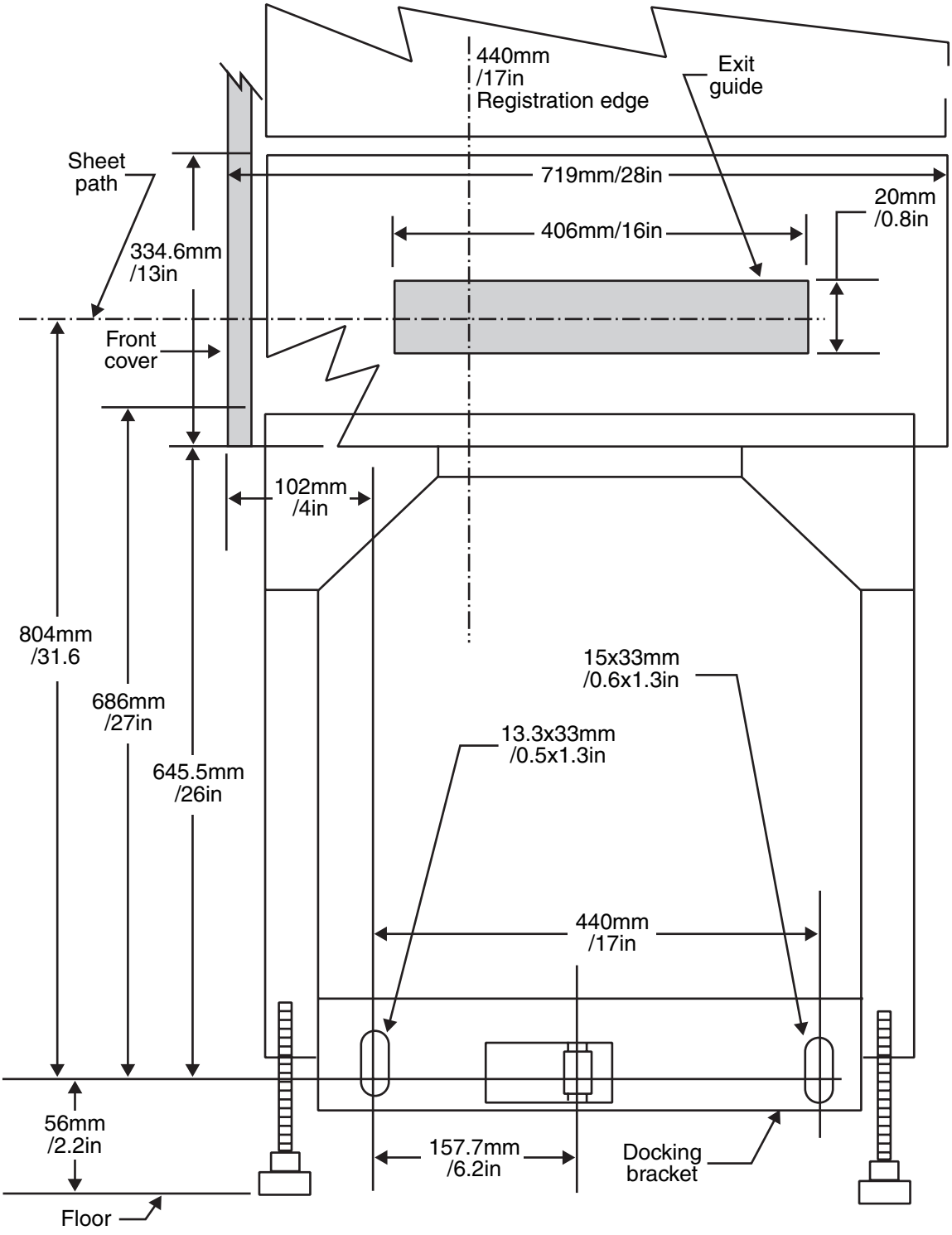

Figure 4-3. Bypass transport dimensions

Service access

The following figure provides space planning information and service access requirements for the bypass transport.

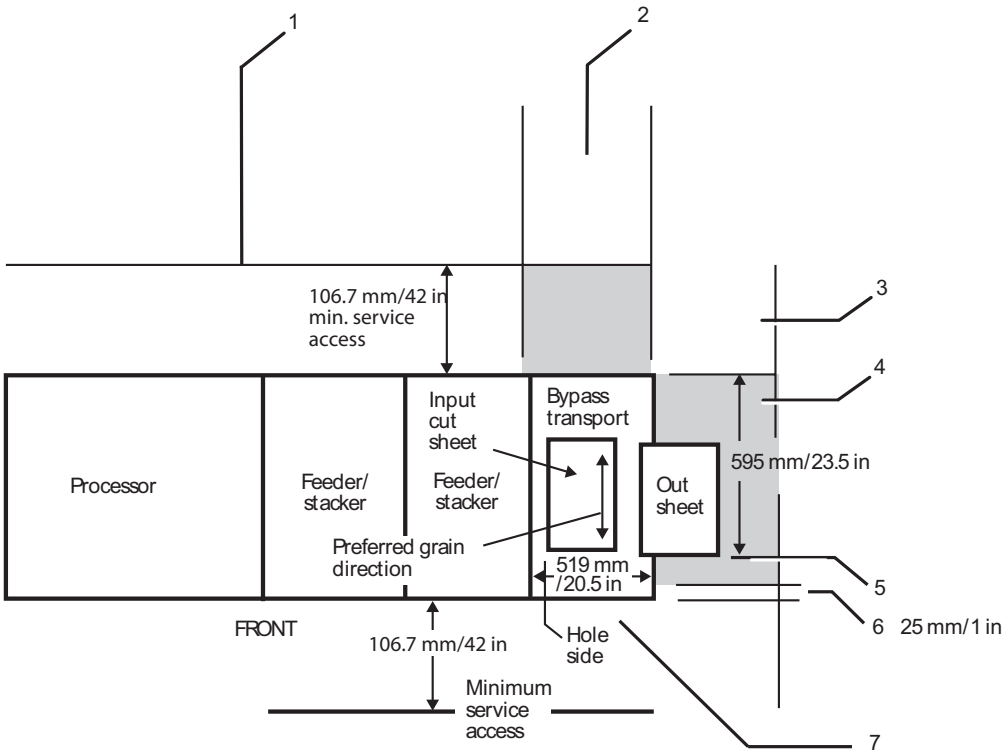

Figure 4-4. Bypass transport space planning diagram (top view)

1. Recommended third-party feeder hardware attaches at the rear of the printer
2. Expected third-party input paper feed path
3. Neutral area, to remain unoccupied
4. Shaded areas at rear and right side of the bypass transport require third-party input/output devices to be undockable from the feeder/stacker or the bypass transport
5. Register edge of the output sheet
6. Third-party hardware must not extend more than 1 inch (25 mm) beyond the bypass transport front cover line for correct front door access
7. Bypass transport / input enablement jam clearance space is required

NOTE: *The diagrams and space requirements do not include the space and service requirements for any additional finishing devices. Refer to the appropriate finishing device documentation for details.*

Space planning guidelines

When determining your space requirements and planning for shared space between your printers, it is important to consider all of the components you plan to install.

NOTE: *If any doorway or hallway through which the printer is to be moved for delivery is smaller than 37 inches (93 cm), the Rigger and Xerox Service Representative must be present at the time of delivery to disassemble the printer module. Preparing for installation is a responsibility shared by personnel at your site and Xerox. Your Xerox representatives are available to discuss installation issues and to assist you in completing the site installation tasks.*

To ensure all of the space requirements are met, it is important to work with your Xerox representative.

Before installation, you must consider the following:

- Clearance space requirements where you intend to install the printer
- Recommended cable lengths and locations (refer to the “System connections” chapter of this guide for more information)
- Delivery access requirements
- Floor leveling

Clearance space requirements

The printer must be installed in a fixed location that provides the following clearance space:

- 78 inches (198 cm) of vertical clearance throughout the entire area
- 36 inches (91 cm) of clearance in back of each component
- 42 inches (106.7 cm) of exclusive operator/service area in front of each component (plus an additional 28 inches in front of the cart that extends from the front of the printer)
- 33 inches (83 cm) to the left of the printer to accommodate the controller with or without the stand

Shared space between components

It is best to provide the full amount of clearance space around the hardware components. Your environment may require you to use shared space between components such as between the printer and the controller or between the printer and another Xerox printing system. You can share the 36-inch (91.4 cm) clearance space around each component, as long as you follow these rules:

- Space may be shared only with other Xerox equipment.
- Components may share the 36-inch (91.4 cm) general service clearance areas, but they may not share the 24-inch (61 cm) operator area in front of each component.
- There must be 78 inches (198 cm) of vertical clearance throughout the entire area.

NOTE: *Finishers that are attached to your bypass transport may occupy shared space with Xerox equipment. However, they must be removable to allow servicing of the printer feeders and stackers. Consult with your Xerox representative to ensure all the requirements are met.*

Shared space configuration diagrams for the DT 128/155/180 HLC Printer

The following figures illustrate three possible configurations of shared space for the DocuTech 128/155/180 HLC Printer.

Back-to-back shared space

The figure below illustrates the two printers placed in a back-to-back position. This allows the printers to share the entire general service space.

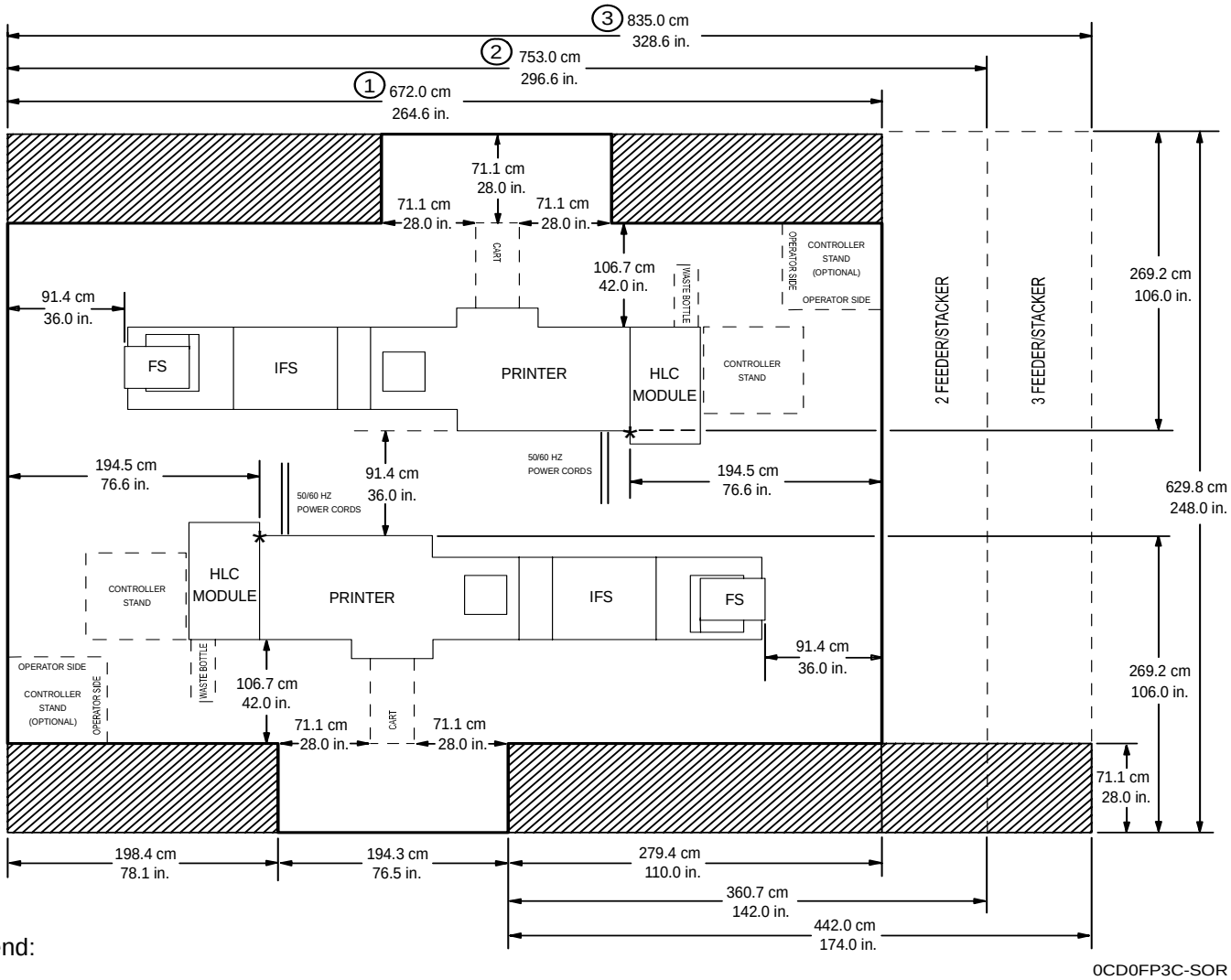

Legend:

* Base point for positioning print engine at installation

Figure 4-5. DT 128/155/180 HLC Printer Back-to-back shared service area space

Front-to-front shared space

The following figure shows the two printers facing each other. The printers share the general service space, but not the exclusive operator area in front of each printer.

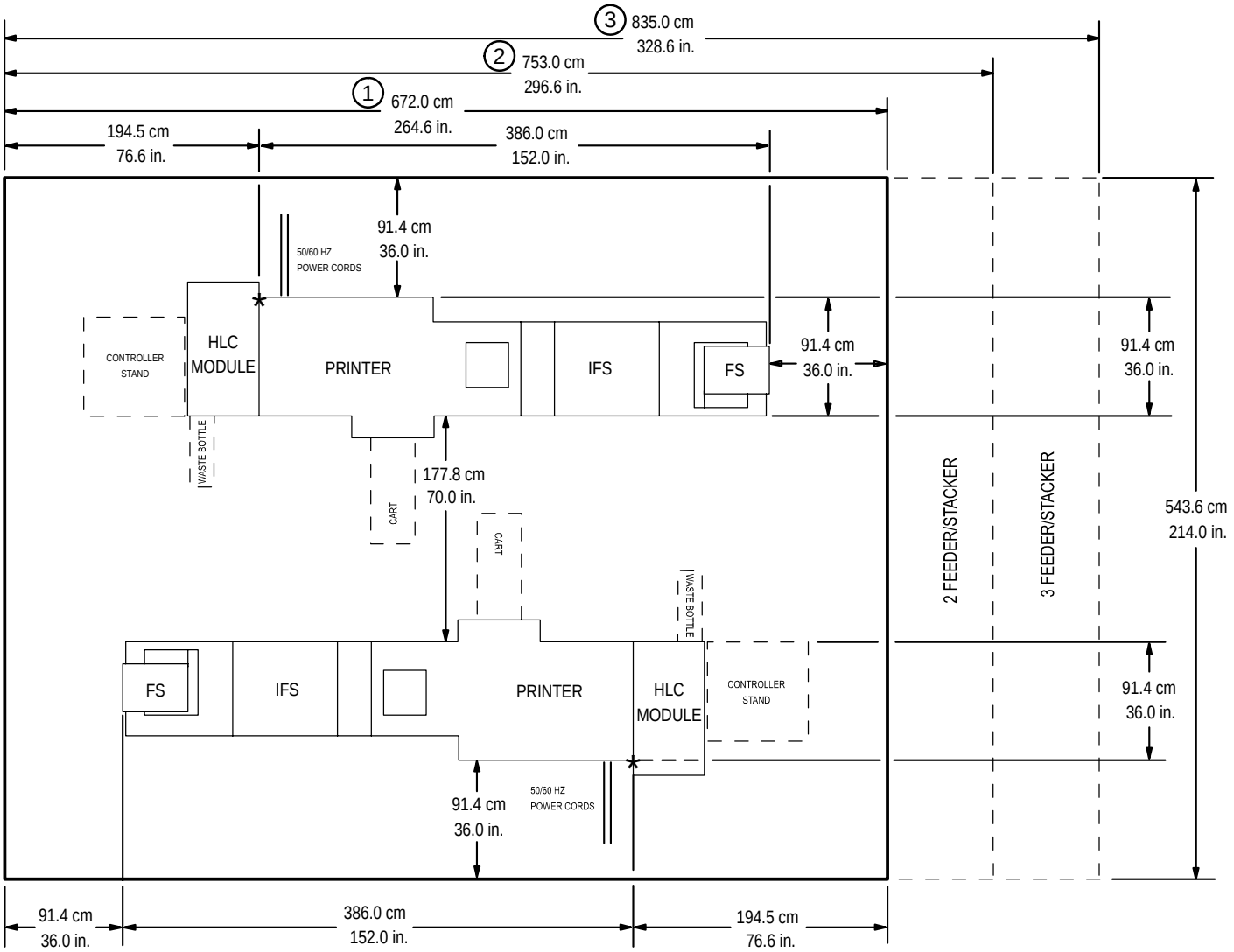

Legend:

0CD0FP2C-SOR

* Base point for positioning print engine at installation

Figure 4-6. DT 128/155/180 HLC Printer Front-to-front shared service area space

Front-to-back shared space

The following figure shows the two printers arranged with one facing the back of the other.

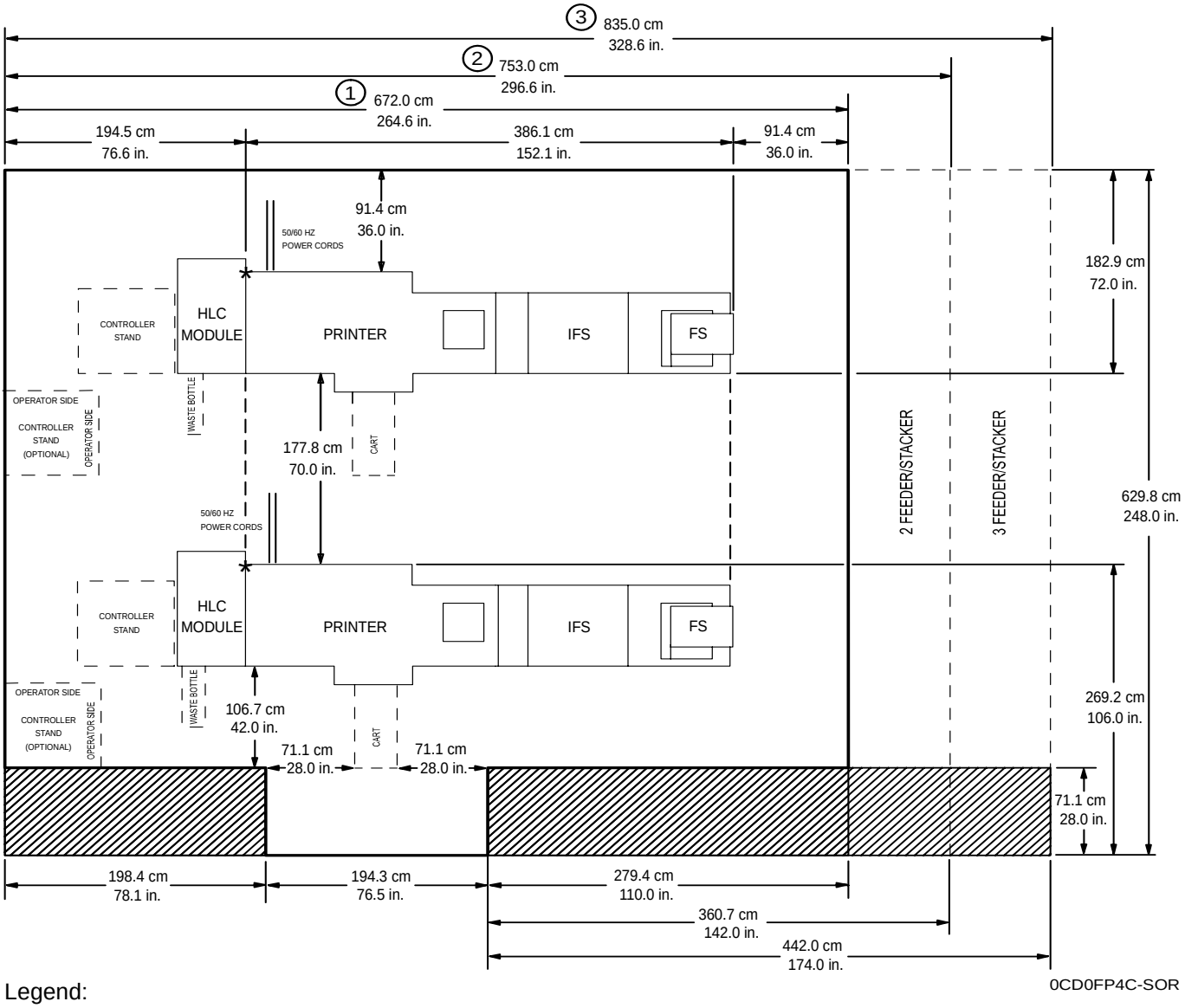

Legend:

* Base point for positioning print engine at installation

Figure 4-7. DT 128/155/180 HLC Printer Front-to-back shared service area space

Shared space configuration diagrams for the DT 180 HLC Production Publisher

The following figures illustrate three possible configurations of shared space for the DocuTech 180 HLC Production Publisher.

Back-to-back shared space

The figure below illustrates the two printers placed in a back-to-back position. This allows the printers to share the entire general service space.

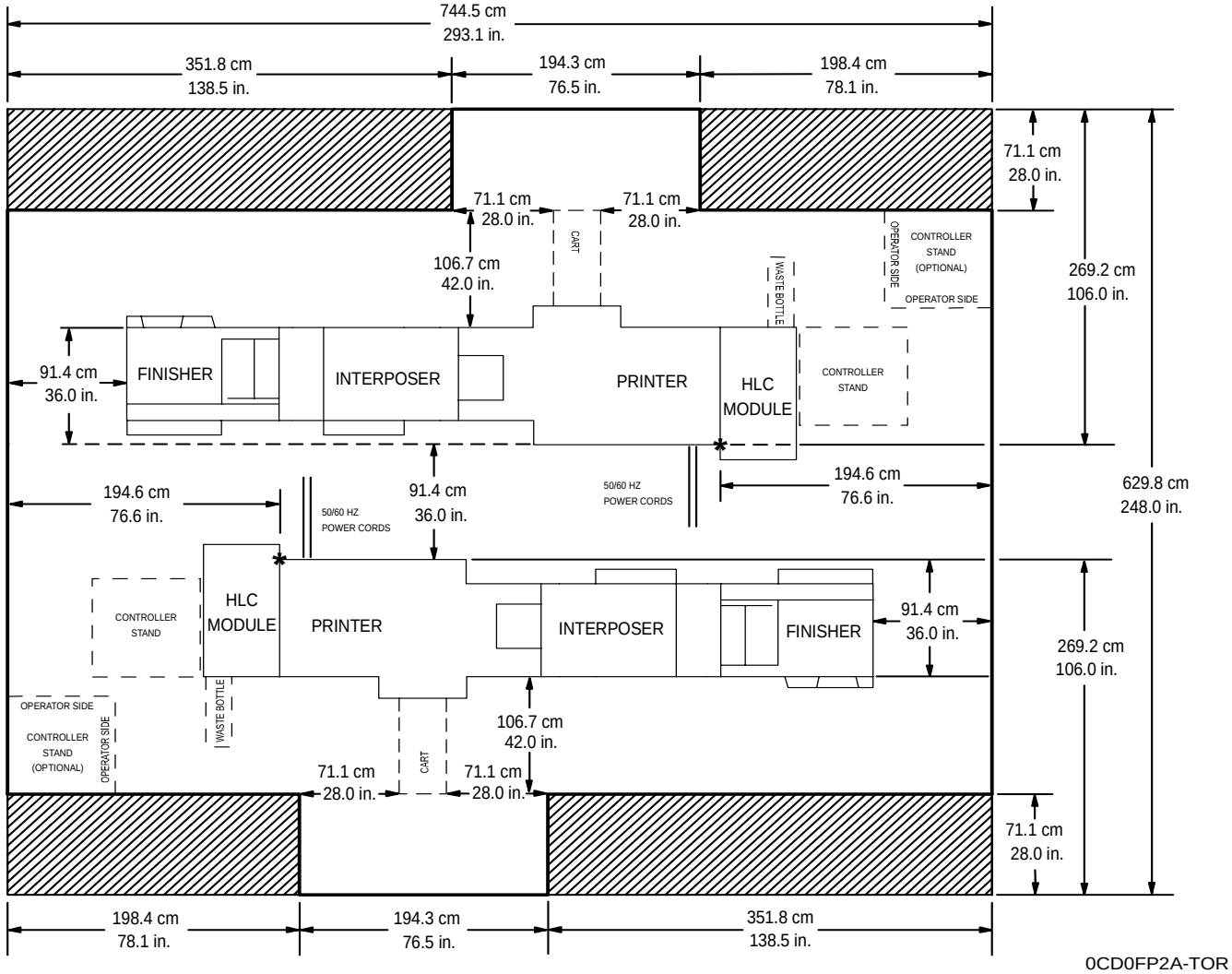

Legend:

* Base point for positioning print engine at installation

Figure 4-8. DT 180 HLC Production Publisher Back-to-back shared service area space

Front-to-front shared space

The following figure shows the two printers facing each other. The printers share the general service space, but not the exclusive operator area in front of each printer.

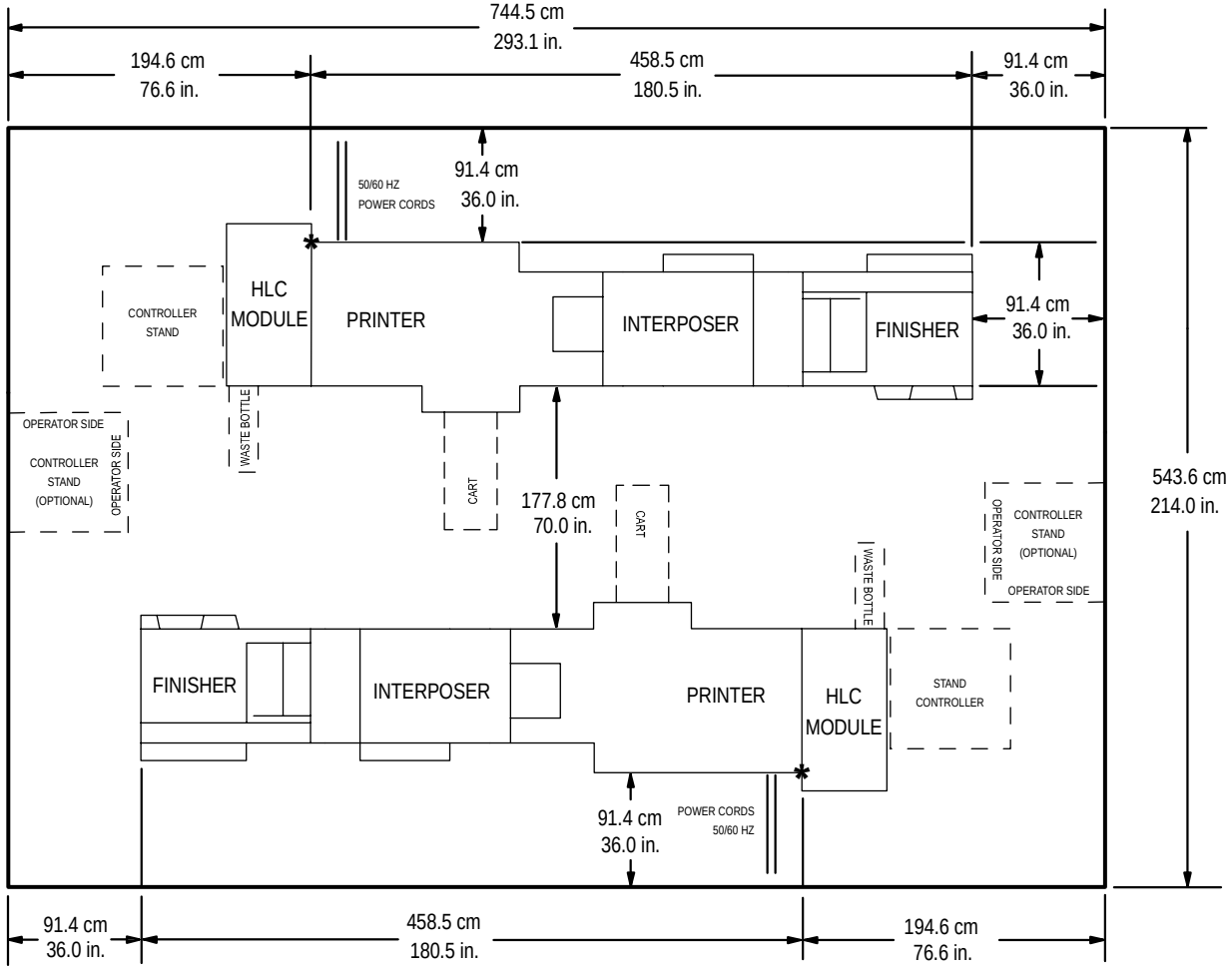

Legend:

0CD0FP3A-TOR

* Base point for positioning print engine at installation

Figure 4-9. DT 180 HLC Production Publisher Front-to-front shared service area space

Front-to-back shared space

The following figure shows the two printers arranged with one facing the back of the other.

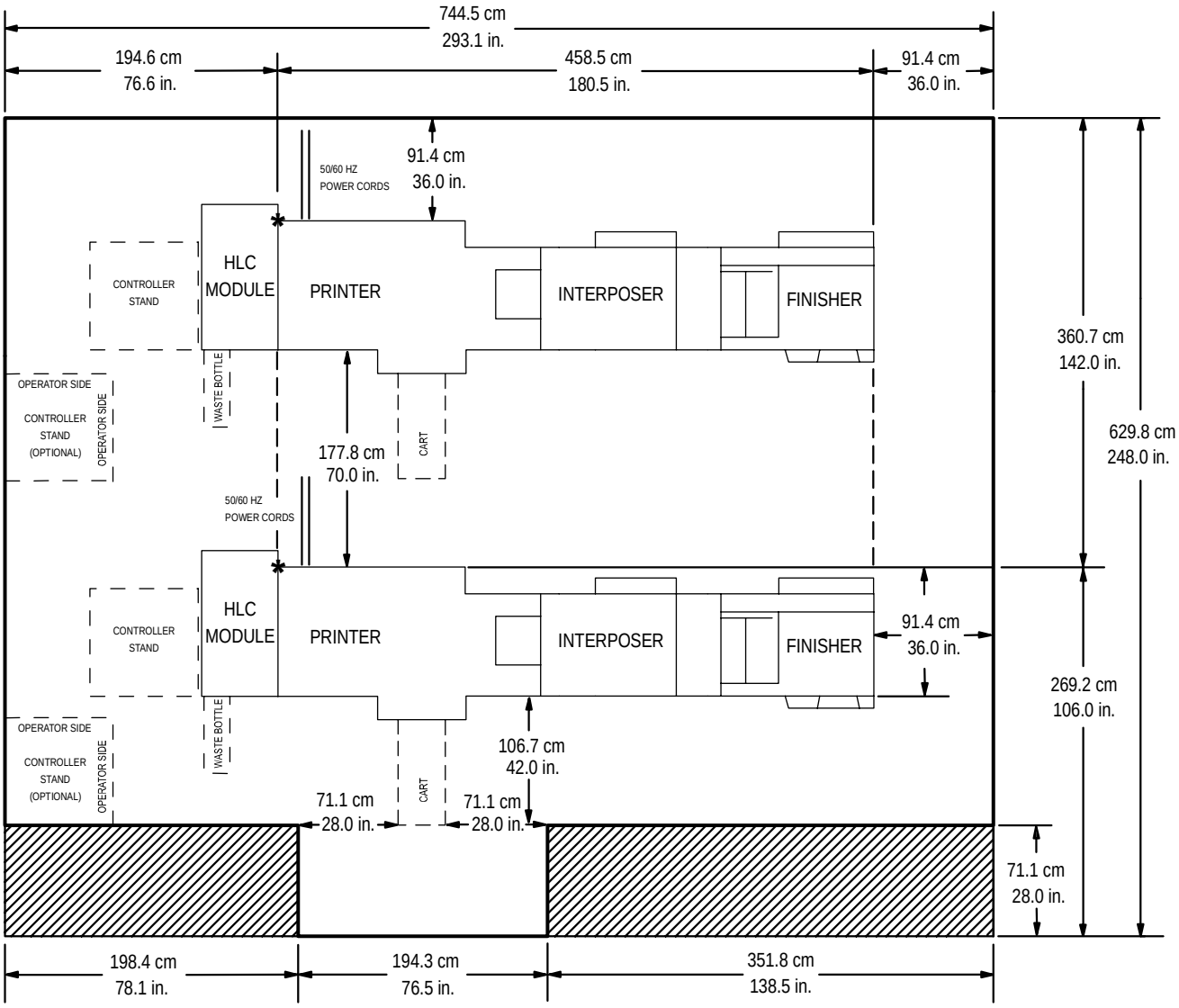

Legend:

* Base point for positioning print engine at installation

Figure 4-10. DT 180 HLC Production Publisher Front-to-back shared service area space

Mobility assist device

The optional mobility assist device is available for the DocuTech 180 HighLight Color production publisher (printer with interposer and finisher). It is a rail system that enables a Xerox service representative to more easily move the printer along its long axis during service.

Floor leveling

For proper operation, the printer must be level. On floors less than two degrees out of level, installation personnel use a leveling kit to level the machine.

NOTE: *The printer will not function properly on floors more than two degrees out of level.*

If the floor is more than two degrees out of level, find another location for the printer.

For your reference, two degrees represents a height discrepancy of approximately 3.8 inches (9.6 cm) measured at the casters with the printer tilting from left to right, or approximately 0.7 inches (1.8 cm) with the printer tilting from back to front.

If the printer is to be moved after its initial installation, it is your responsibility to make sure that the printer can be leveled properly. It is recommended, however, that Xerox personnel move the equipment.

Delivery access requirements

It is easy to overlook the path required to move the equipment from the truck to the operation site. To determine access, ask the following questions:

- Does the equipment need to go up or down a stairwell? How wide is the stairwell?
- Do you have an elevator, if the equipment is to be located above or below the first floor?
- Is the elevator large enough for the equipment?
- How wide are the hallways and doorways?
- Do you have a loading dock or a specific door to which the equipment should be delivered?

You need to review these issues before or during the site inspection conducted by your service representative.

The equipment dimensions are specified later in this chapter, so it is easy to determine whether your hallways and doorways are wide enough to permit access.

Turning radius

You must also consider the width of the passageway when the equipment must negotiate a corner, whether into a room, an elevator, or another passageway.

There are L-shaped turns and T-shaped turns. The diagrams and the tables that follow show the minimum space required to maneuver through the turns.

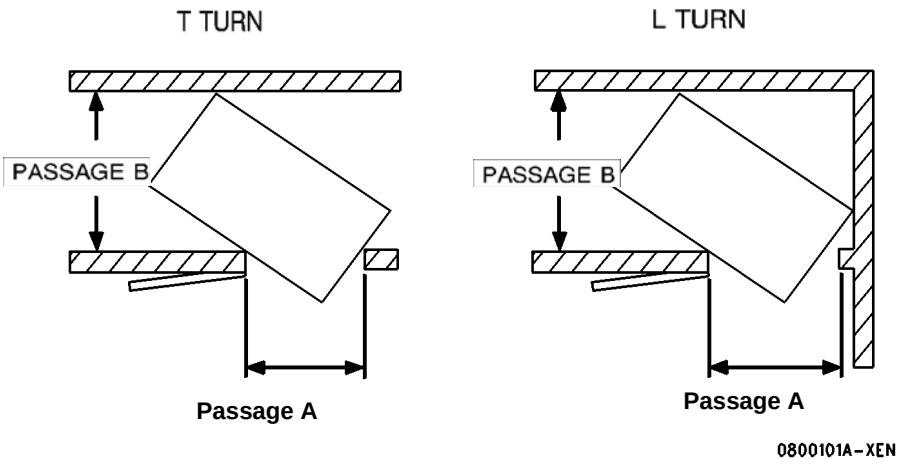

Figure 4-11. L-shaped and T-shaped turns

Using the turning radius tables

To use the tables:

1. Measure the minimum width of the passage or doorway you need to use. This is Passage A.
2. Find that number (or the next higher number) in the turning radius table and read across to the corresponding minimum value for Passage B, depending on the type of turn the equipment must negotiate.

Turning radius for printer with separated components

The printing system is delivered with the printer and its components as separate modules. If necessary, the printer can be separated into two pieces for ease in moving. The larger of the two parts contains the xerographic system; the smaller of the parts (the paper handling module, or PHM) contains paper trays 1 and 2. Do not confuse these two parts of the printer with the inverter or feeder/stacker modules, for example, which have their own turning requirements.

The following table lists the turning requirements for the printer without the PHM (separated).

Table 4-1. Turning radius for printer (separated)

Passage or doorway A width	Minimum passage B width (Cabinet OFF)	Minimum passage B width (Cabinet ON)
29 inches / 73.7 cm	74.5 inches / 189.2 cm	NA
30 inches / 76.2 cm	64.5 inches / 163.8 cm	NA
31 inches / 78.7 cm	62 inches / 157.5 cm	NA
32 inches / 81.3 cm	59.5 inches / 151.1 cm	NA
34 inches / 86.4 cm	56 inches / 142.2 cm	NA
36 inches / 91.4 cm	53 inches / 134.6 cm	NA
38 inches / 96.5 cm	50 inches / 127 cm	NA
40 inches / 101.6 cm	48 inches / 121.9 cm	NA
42 inches / 106.7 cm	45.5 inches / 115.6 cm	NA

The following table lists the turning requirements for the printer if it is upended for easier moving or stair-climbing. This table reflects requirements for the printer separated from the PHM.

Table 4-2. Turning radius for printer (separated and upended on dolly)

Passage or doorway A width	Minimum passage B width (Cabinet OFF)	Minimum passage B width (Cabinet ON)
30 inches / 76.2 cm	49 inches / 124.5 cm	NA
31 inches / 78.7 cm	43 inches / 109.2 cm	NA
32 inches / 81.3 cm	41 inches / 104.1 cm	NA
34 inches / 86.4 cm	37.5 inches / 95.3 cm	NA
36 inches / 91.4 cm	35 inches / 88.9 cm	NA
38 inches / 96.5 cm	33.5 inches / 85.1 cm	46.25 inches / 117.5 cm
40 inches / 101.6 cm	32 inches / 81.3 cm	43.0 inches / 109.0 cm

Table 4-3. Turning radius for printer (separated and upended on dolly)

Passage or doorway A width	Minimum passage B width (Cabinet OFF)	Minimum passage B width (Cabinet ON)
42 inches / 106.7 cm	31 inches / 78.7 cm	40.5 inches / 103.0 cm

Turning radius for unseparated printer components

The following table lists the turning requirements for the printer when attached to the paper handling module (not separated).

Table 4-4. Turning radius for printer (not separated)

Passage or doorway A width	Minimum passage B width (Cabinet OFF)	Minimum passage B width (Cabinet ON)
29 inches / 73.7 cm	83 inches / 210.8 cm	NA
30 inches / 76.2 cm	76 inches / 193 cm	NA
31 inches / 78.7 cm	73 inches / 185.4 cm	NA
32 inches / 81.3 cm	70.5 inches / 179.1 cm	NA
34 inches / 86.4 cm	66.5 inches / 169 cm	NA
36 inches / 91.4 cm	63.5 inches / 161.3 cm	NA
38 inches / 96.5 cm	61.5 inches / 156.2 cm	63.7 inches / 161.8 cm
40 inches / 101.6 cm	58 inches / 147.3 cm	61.5 inches / 156.2 cm
42 inches / 106.7 cm	55 inches / 139.7 cm	59.75 inches / 151.7 cm

Turning radius for inverter feeder/ stacker module

The following table lists the turning requirements for the inverter feeder/stacker module.

Table 4-5. Turning radius for inverter feeder/stacker module

Passage or doorway A width	Minimum passage B width (Cabinet OFF)	Minimum passage B width (Cabinet ON)
29 inches / 73.7 cm	43 inches / 109.2 cm	NA
30 inches / 76.2 cm	41 inches / 104.1 cm	NA
31 inches / 78.7 cm	40 inches / 101.6 cm	NA
32 inches / 81.3 cm	38 inches / 96.5 cm	NA
33 inches / 83.8 cm	37 inches / 94 cm	NA
34 inches / 86.4 cm	36 inches / 91.4 cm	NA
35 inches / 88.9 cm	35 inches / 88.9 cm	NA
36 inches / 91.4 cm	34 inches / 86.4 cm	NA
37 inches / 94 cm	33 inches / 83.8 cm	NA
38 inches / 96.5 cm	32 inches / 81.3 cm	NA
39 inches / 99.1 cm	31 inches / 78.7 cm	NA
40 inches / 101.6 cm	31 inches / 78.7 cm	NA
41 inches / 104.1 cm	30 inches / 76.2 cm	NA
42 inches / 106.7 cm	29 inches / 73.7 cm	NA
43 inches / 109.2 cm	29 inches / 73.7 cm	NA

NOTE: *These figures are based on inverter feeder/stacker dimensions of 28 inches / 711 mm x 42 inches / 1,067 mm.*

Turning radius for feeder/stacker modules

The following table lists the turning requirements for the feeder/stacker module.

Table 4-6. Turning radius for feeder/stacker module

Passage or doorway A width	Minimum passage B width (Cabinet OFF)	Minimum passage B width (Cabinet ON)
29 inches / 73.7 cm	33 inches / 83.8 cm	NA
30 inches / 76.2 cm	32 inches / 81.3 cm	NA
31 inches / 78.7 cm	31 inches / 78.7 cm	NA
32 inches / 81.3 cm	30 inches / 76.2 cm	NA
33 inches / 83.8 cm	29 inches / 73.7 cm	NA

NOTE: *These turning figures are based on feeder/stacker dimensions of 28 inches / 71.1 cm x 32.25 inches / 81.9 cm.*

Turning radius for the finisher

The following table lists the turning requirements for the finisher module.

Table 4-7. Turning radius for finisher module

Passage or doorway A width	Minimum passage B width (Cabinet OFF)	Minimum passage B width (Cabinet ON)
29 inches / 73.7 cm	55.5 inches / 141 cm	NA
30 inches / 76.2 cm	54 inches / 137.2 cm	NA
31 inches / 78.7 cm	52 inches / 132.1 cm	NA
32 inches / 81.3 cm	51 inches / 129.5 cm	NA
34 inches / 86.4 cm	47 inches / 119.4 cm	NA
36 inches / 91.4 cm	45 inches / 114.3 cm	NA
38 inches / 96.5 cm	43 inches / 109.2 cm	NA
40 inches / 101.6 cm	41 inches / 104.1 cm	NA
42 inches / 106.7 cm	39 inches / 99.1 cm	NA

NOTE: *These turning figures are based on finisher dimensions of 56 inches / 142.2 cm x 37.5 inches / 95.2 cm.*

Printer hardware specifications and requirements summary

The following table summarizes the specifications and electrical requirements of your printer hardware components.

Table 4-8. Printer specifications and power requirements

Device	Dimensions (width and depth)	Total Weight	Heat dissipation	Power requirements
Printer/HLC with inter-poser and finisher **(DT 180 HLC production publisher)**	W=203.5 in / 516.8 cm D=42 in / 106.6 cm (with all front and rear covers) Total space required (plus access): 293.1 in (W) x 142.0 in (D) / 744.5 cm x 360.6 cm	3724 lbs 1689 kg	**Operating:** 32,770 BTU per hr. **Standby:** 4,454 BTU per hr. **Energy Saver:** 2,700 BTU per hr.	**60 Hz** 120/240 VAC or 120/208 VAC; 50 amp service; NEMA L14-50R; KVA 7.3 (operating) (2 Cords required) 120/208 VAC (182 V to 220 V), KVA 7.3 (operating) **Cord 1:** 50 amp, NEMA 14-50R **Cord 2:** 30 amp, NEMA 14-30R **50 Hz:** Consult your local service representative.

Device	Dimensions (width and depth)	Total Weight	Heat dissipation	Power requirements
Printer/HLC with inverter feeder/ stacker and one feeder/ stacker	W=175 in / 444.5 cm D=42 in / 106.6 cm (with all front and rear covers) Total space required (plus access): 264.6 in (W) x 142.0 in (D) / 672 cm x 361 cm	3129 lbs 1419.3 kg	**Operating:** 32,770 BTU per hr. **Standby:** 4,454 BTU per hr. **Energy Saver:** 2,700 BTU per hr.	**60 Hz** 120/240 VAC or 120/ 208 VAC; 50 amp service; NEMA L14-50R; KVA 7.3 (operating) (2 Cords required) 120/208 VAC (182 V to 220 V), KVA 7.3 (operating) **Cord 1:** 50 amp, NEMA 14-50R **Cord 2:** 30 amp, NEMA 14-30R **50 Hz:** Consult your local service representative.
Printer/HLC with inverter feeder/ stacker and two feeder/ stackers	W=207 in / 525.7 cm D=42 in / 106.6 cm (with all front and rear covers) Total space required (plus access): 296.6 in (W) x 142.0 in (D) / 753 cm x 361 cm	3650 lbs 1655 kg	**Operating:** 32,770 BTU per hr. **Standby:** 4,454 BTU per hr. **Energy Saver:** 2,700 BTU per hr.	**60 Hz:** 120/240 VAC or 120/ 208 VAC; 50 amp service; NEMA 14-50R, KVA 8.1(operating) (2 Cords required) 120/208 VAC (182 V to 220 V), KVA 8.1(operating) **Cord 1:** 50 amp, NEMA 14-50R **Cord 2:** 30 amp, NEMA 14-30R **50 Hz:** Consult your local service representative

Device	Dimensions (width and depth)	Total Weight	Heat dissipation	Power requirements
Printer/HLC with inverter feeder/ stacker and three feeder/ stackers	W=239 in / 607 cm D=42 in / 106.6 cm (with all front and rear covers) Total space required (plus access): 328.6 in (W) x 142.0 in (D) / 835 cm x 361 cm	4171 lbs 1892 kg	**Operating:** 32,770 BTU per hr. **Standby:** 4,454 BTU per hr. **Energy Saver:** 2,700 BTU per hr.	**60 Hz:** 120/240 VAC or 120/ 208 VAC; 50 amp service; NEMA 14-50R, KVA 8.1(operating) (2 Cords required) 120/208 VAC (182 V to 220 V), KVA 8.1(operating) **Cord 1:** 50 amp, NEMA 14-50R **Cord 2:** 30 amp, NEMA 14-30R **50 Hz:** Consult your local service representative
Bypass transport	W=20 in / 50.8 cm D=28 in / 71.1 cm	176 lbs / 80 kg	---	---

Power requirements

Your printer has important power requirements that must be accommodated. These requirements are summarized in the table below.

For further details on power requirements, refer to the voltage charts that follow.

Table 4-9. Printer electrical requirements

Component	Voltage	Amp. service	KVA rating (operating mode)	Additional Requirements
Printer 60 Hz (U.S. and Canada)	120/240 VAC or 120/208 VAC (Cord 1) 120/240 VAC or 120/208 VAC (Cord 2)	50 amp (Cord 1) 30 amp (Cord 2)	**Operating:** 8.1 +.75 per middle module stacker	14-50R (Cord 1) 14-30R (Cord 2)
Printer 50 Hz - WYE (Star)	220/380 VAC or 230/400 VAC or 240/415 VAC (3 phase, 5 wire)	30 amp (one cord)	Consult your local service representative	

Outlet configurations

This section discusses specifications for printer outlets and the required wall outlet configurations for the USA / Canada and internationally.

NOTE: *All power outlets must be dedicated to this equipment. When determining the electrical connections for your printer, make sure that:*

- *Each power cord has a separate circuit*
- *The printer power cord configurations match your receptacle*
- *Your electrical outlets are within the r*equired specifications

50 Hz systems: Ensure that power connections are per local codes/regulations.

60 Hz printer outlet voltages

The following table shows the voltages for the outlets on your printer. All power outlets must have a dedicated circuit for each system equipment piece. Make sure each power cord has a separate circuit.

Table 4-10. Printer (60 Hz) voltage requirements at power outlet.

Service outlet configuration (3 wires plus ground)	Measurement of wiring	Nominal	Range
4 Wire	Line 1 to neutral	120 V RMS	107-127 V RMS
4 Wire	Line 2 to neutral	120 V RMS	107-127 V RMS
4 Wire	Neutral to ground	0	0-10 V RMS
4 Wire	Line 1 to line 2	208 V RMS	182-220 V RMS
4 Wire	Line 1 to line 2	240 V RMS	210-254 V RMS

50 Hz printer outlet voltages

All power outlets must have a dedicated circuit for each system equipment piece. Make sure power cord has a separate circuit.

NOTE: *Consult with your service representative to ensure that the installation conforms to your local electrical requirements.*

WYE (or Star) configurations– 50 Hz

For the 50 Hz WYE configuration, measure the WYE or Star connection voltages at the power source. Three-phase branch circuit (3 lines and neutral, plus ground. Total 5-wire system, including ground).

The following tables list the 50 Hz WYE/Star printer outlet information for 380,400, and 415 volts.

Table 4-11. Printer (50 Hz) WYE (Star) 415 voltage

Service outlet configuration	Measurement of wiring	Nominal	Range
5 Wire 415 V	Line 1 to line 2	415 V RMS	374-457 V RMS
5 Wire 415 V	Line 2 to line 3	415 V RMS	374-457 V RMS

Service outlet configuration	Measurement of wiring	Nominal	Range
5 Wire 415 V	Line 1 to Line 3	415 V RMS	374-457 V RMS
5 Wire 415 V	Line 1 to neutral	240 V RMS	216-264 V RMS
5 Wire 415 V	Line 2 to neutral	240 V RMS	216-264 V RMS
5 Wire 415 V	Line 3 to neutral	240 V RMS	216-264 V RMS

Table 4-12. Printer (50 Hz) WYE (Star) 380 and 400 voltage.

Service outlet configuration	Measurement of wiring	Nominal	Range
5 Wire 380 V	Line 1 to line 2	380 V RMS	342-419 V RMS
5 Wire 380 V	Line 2 to line 3	380 V RMS	342-419 V RMS
5 Wire 380 V	Line 1 to Line 3	380 V RMS	342-419 V RMS
5 Wire 380 V	Line 1 to neutral	220 V RMS	198-242 V RMS
5 Wire 380 V	Line 2 to neutral	220 V RMS	198-242 V RMS
5 Wire 380 V	Line 3 to neutral	220 V RMS	198-242 V RMS
5 Wire 400 V	Line 1 to line 2	400 V RMS	358-438 V RMS
5 Wire 400 V	Line 2 to line 3	400 V RMS	358-438 V RMS
5 Wire 400 V	Line 1 to Line 3	400 V RMS	358-438 V RMS
5 Wire 400 V	Line 1 to neutral	230 V RMS	207-253 V RMS
5 Wire 400 V	Line 2 to neutral	230 V RMS	207-253 V RMS
5 Wire 400 V	Line 3 to neutral	230 V RMS	207-253 V RMS

Printer power outlet/ cord voltage configurations– 50 Hz

For 50 Hz systems outlet/power cord configurations, consult your local service representative to determine the type of plug and receptacle to use.

Electrical requirements

DocuTech HLC printer

The DocuTech HLC printer is produced either as a 50 Hz or 60 Hz unit and is not interchangeable. Power for base accessories comes directly from the printer. The printer can be internally configured to one of the following (local) power distributions:

60Hz (dual power cord)

Single service dedicated lines. 3 wires plus ground.

Voltage Range is measured at the IOT terminal box.

Dual Power Cord only (A single power cord version is not available for the DocuTech HLC).

View - 60 Hz 50 amp Plug

NEMA 14-50P
3(2) HP

View - 60 Hz 30 amp Plug

NEMA 14-30P
2(2) HP

<u>Cord 1:</u> 50 amp. per line

NEMA 14-50P connector

Single service dedicated line. 3 wires plus ground.

Option 1:

Single Phase Branch Circuit: (2 lines and neutral, plus ground; total 4 wires, including ground).

Line to neutral: 120 V (nominal); Range 107 V (minimum) to 127 V (maximum)

Line to line: 240 V (nominal); Range 210 V (minimum) to 254 V (maximum)

Option 2:

Two-Phase of a three-phase Branch Circuit (2 lines and neutral, plus ground; total 4-wire system, including ground).

Line to neutral: 120 V (nominal); Range 107 V (minimum) to 127 V (maximum)

Line to line: 208 V (nominal); Range 185 V (minimum) to 220 V (maximum)

Cord 2: 30 amp. per line

NEMA 14-30P connector

Single service dedicated lines. 3 wires plus ground.

Option 1:

Single Phase Branch Circuit: (2 lines and neutral, plus ground; total 4 wires, including ground).

Line to neutral: 120 V (nominal); Range 107 V (minimum) to 127 V (maximum)

Line to line: 240 V (nominal); Range 210 V (minimum) to 254 V (maximum)

Option 2:

Two-Phase of a three-phase Branch Circuit (2 lines and neutral, plus ground; total 4-wire system, including ground).

Line to neutral: 120 V (nominal); Range 107 V (minimum) to 127 V (maximum)

Line to line: 208 V (nominal); Range 185 V (minimum) to 220 V (maximum)

50 Hz (one power cord)

Plug configured for site based on local requirements.

Single service dedicated line with 3 phase power.

Voltage Range is line to neutral 198 to 254 VAC measured at the IOT terminal box.

30 amp per phase

50 Hz (+/- 1.0 Hz)

Delta service is not supported.

Wye (Star) service

Three-Phase Branch Circuit (3 lines and neutral, plus ground; total 5-wire system, including ground).

380/400/415v (220/230/240v per phase); taps set based on actual on-site measurement.

220/380 volts (L-N/L-L) (+/- 10%)

230/400 volts (L-N/L-L) (+/- 10%)

240/415 volts (L-N/L-L) (+/- 10%)

Network requirements

This section describes the network requirements for installing one or more DocuTech printers. Work with your Network Administrator to assess what type of network you have and what modifications need to be made to supply an Ethernet connection for the DocuSP controller.

Network hardware

The Ethernet interface on the DocuSP controller is a 10/100/1000 MB per second twisted pair standard (10BaseT, 100Base T, or 1000BaseT). Attachment Unit Interface (AUI) Coax Ethernet is enabled with an optional adapter cable.

The Ethernet connection to the DocuSP controller must be compatible with the Institute of Electrical and Electronics Engineers (IEEE) 802.3 standard.

Network protocols

The DocuSP controller supports TCP/IP, IPX/SPX, Socket TCP/IP, and EtherTalk Link Access Protocol (ELAP) protocols if the proper gateways are installed on the controller.

NOTE: *The DocuSP controller does not provide Novell server network services. If you plan to use the IPX/SPX protocol, you must have a Novell server installed on your network.*

Telephone requirements

One telephone line is recommended where the DocuTech printer is installed.

Customer support

There will be times when the operator or administrator will need to read the screen information from the DocuSP controller dialogs to the customer support personnel. Therefore, it is necessary to provide a telephone in close proximity to the DocuTech system so

that the operator or administrator can easily view the screen and operate the system while remaining on the telephone.

Environmental requirements

This section describes the environmental requirements for installing one or more DocuTech printers.

Temperature, humidity, and altitude specifications

When you select a site location for your DocuTech printer, avoid environments with extreme variations in temperature and other hazards, such as excessive dust or humidity.

The recommended environmental ranges for the work area are as follows:

Table 4-13. Printer environmental specifications

Condition	Range	
Operating temperature	Recommended: Minimum: Maximum:	72° F+/-4 °F / 20° C to 24° C 50° F / 10° C 85° F / 29° C
Humidity	Recommended: Minimum: Maximum: Degraded performance at:	45% ±15% 30% 65% (no condensation) 15% to 85% (no condensation)
Altitude	Normal: Maximum: (NOTE: the machine will exhibit degraded performance above the Normal range)	Up to 6,000 feet / 1,830 m above sea level 9,000 feet / 2,743 m above sea level
Heat dissipation: DT 128, 155 and 180 (2-stacker system)	 Operating: Standby: Energy Saver:	 32,770 BTU/hour 4,454 BTU/hour 2,700 BTU/hour
Audible noise	Operating: Standby:	72 dB(A) 61 dB(A)

Heat management

The DocuTech system produces significant amounts of heat when running in a production environment. The heat produced by the system must be considered when selecting a suitable location.

Heat management assessment process

Consult the site HVAC engineer or contractor to determine whether the heat output can be managed by air conditioning at the site. Consider the following items when assessing the acceptable environmental operating conditions for the system:

- heat output of the system when in operating mode (32,770 BTU/hour)
- current relative humidity and temperature of the site
- acceptable system environmental requirements
- high outside temperatures
- incoming airflow rate in total cubic feet per minute (CFM)

Heat Vent Kit option for the DT HLC 180

If the customer site in which the production publisher printer will be located is small and adequate venting is an issue, a heat vent kit is available for purchase by the customer.

Installed on the IOT, the Heat Vent Kit provides the customer with the ability to vent the excess heat produced by the printer through the ceiling.

A Heat Vent Extension Kit is also available and is used to vent heat from the interposer module.

Both kits are available through CAS and include installation instructions for the CSE. Also, a kit is available for the 50Hz or 60 Hz configuration.

Item	Order Number
IOT Heat Vent Kit	98K06472
Interposer Heat Vent Extension Kit	98K42600

Ordering supplies for the installation

You need to order consumable supplies (those that are depleted during operation of the printer), such as paper, dry ink, developer, and fuser blend. It is important that you have an adequate supply on hand for installation and that you maintain the supply after installation.

This section describes the supplies needed for installation. Your sales representative will help you place your initial order for supplies. The "Maintenance" chapter provides you with the information you need to order additional supplies as you require them, a consumable supplies table, and a supplies checklist.

Paper

You need to select your paper carefully. If you do not use the proper paper, you increase the probability of paper jams and misfeeds.

Acceptable paper stocks and sizes

Paper trays 1 and 2 accept 8.5 x 10 inch (215 x 254 mm), 9 x 11 inch (228 x 279 mm), 9 x 14.33 inch (228 x 364 mm), and A4 (210 x 297 mm) cut sheet paper. Paper trays 3, 4, and 5 accept paper up to 17 x 14.33 inches (432 x 364 mm).

NOTE: *17 x 14.33 inch (432 x 364 mm) paper can be sent to the top tray and Bypass Transport.*

You can use standard white, colored, pre-drilled, and preprinted (letterhead and forms) paper, labels, and transparencies. The stock you use must meet the specifications set forth by Xerox for operability in the printer.

For additional information about paper specifications, refer to the Xerox Document Services Platform Series DocuTech 128/155/180 Operator Guide.

Recommended weight and grade

Use a good quality, xerographic-grade paper. For best results, use paper that is 20-pound or 80-grams per square meter (gsm) bond, xerographic grade. Xerox 4024 Dual Purpose Paper provides optimal performance in the printer. Refer to the consumable supplies table in the "Maintenance" chapter.

Use paper within these parameters:

- Lightest: 16-pound or 60-gsm
- Heaviest: 110-pound or 200-gsm

Paper is fed into the printer with the long side as the leading edge. When you purchase paper, buy long-grain paper. Make sure the grain is parallel with the long side (long grain) for the most reliable feeding and stacking.

Storing paper

Paper has a tendency to curl under the heat that is present inside xerographic equipment. To minimize the amount of curling, use paper with low moisture content. Paper with excessive moisture content has a tendency to jam because of the greater curl. The maximum recommended moisture content is 5.7 percent. Keep these points in mind when preparing your paper storage area:

- Store paper in its own wrapper; do not leave it unwrapped or where it can be damaged by dampness or heat.
- Store paper on a flat surface and not on its side or edge.
- Store reams of paper in a closed cabinet.
- Always store paper in a cool, dry area. Store on pallets or shelves, not on the floor.
- Plan ahead and keep at least a day's supply of paper in the same area as the printer to allow environmental stabilization prior to printing.

Dry ink

Dry ink (also referred to as toner) is the black or color powder which forms the image on the printed page. There are three cartridges of dry ink in each carton. You should keep at least one extra cartridge on hand at all times. The disposable cartridges are easily changed with no mess.

The consumption rate of Xerox dry ink is dependent upon the area coverage per page. Use only dry ink that is specified for use in the DocuTech printer as described in the consumable supplies table.

Fuser lubricant

Fuser lubricant is a consumable item required by the printer. You should keep at least one bottle on hand for installation by the service representative. The consumption rate of Xerox fuser lubricant is approximately one bottle per 200,000 pages.

Fuser lubricant is available as either Fuser Shield or Fuser Blend. Fuser Shield is recommended for the printer in most cases. Fuser Blend may be appropriate if you are performing post print inline finishing operations. To be sure of which lubricant to use, contact your Xerox representative.

NOTE: *The label on the cap of the fuser bottle identifies the type of fuser lubricant to use in the printer.*

CAUTION: *Fuser lubricant for other printers may not be compatible. Do not use DocuTech 61xx and DocuPrint EPS fuser agent in a DocuTech HighLight Color system. It will contaminate the system. Also, do not use DocuTech HLC fuser blend in other DocuTech or DocuPrint systems.*

NOTE: For product information, refer to the consumable supplies table in the "Maintenance" chapter.

Developer (Black)

Black Developer is not consumed by the printer but it does have an effective life that is dependent upon the number of charged images printed and the size of the stock. Developer is also a required item you need to order and keep on hand. It is changed by the service representative. Use only developer specified for use in your DocuTech printer. For product information, refer to the consumable supplies table in the "Maintenance" chapter.

For countries other than the United States, the Xerox Service Representative may order and stock developer.

4mm cartridge tape

The 4mm cartridge tape drive uses 12-24 GB capacity (120 meter) DDS-2 tapes. For product information, refer to the consumable supplies table in the "Maintenance" chapter.

5 Installation

This chapter describes the activities performed by you and Xerox during the installation of the Xerox DocuTech 128/155/180 HighLight Color hardware and software components. Before installation can begin, you must complete the tasks described in the “Preparing for installation” chapter of this guide.

Installation process

Xerox is responsible for the physical installation of the DocuTech hardware components and the software.

For customers outside the United States, contact your local Xerox representative or operating company for your specific installation process.

The installation process can take two or several days to complete. Equipment, software kits, and documentation kits may all arrive in one day, or over the course of several days. When all of the necessary items are in place, Xerox personnel will complete the installation of the DocuTech components.

In the United States, the steps in the installation process typically occur in the following order:

1. Xerox personnel installs all printer hardware and connects the printer controller to your network through the Ethernet and/or Token Ring connector you supply.
2. Xerox personnel places the system online.
3. Xerox personnel loads printer controller software on the Printer Controller.
4. Xerox personnel downloads Xerox client software if applicable, on one client workstation to validate the installation. All other client software installations are your responsibility.
5. Xerox personnel tests the system and runs sample jobs.
6. Xerox personnel conducts initial operations training.
7. Xerox personnel reviews preventive maintenance schedules and service call procedures.

Your responsibilities

Xerox personnel are responsible for the physical installation of the printer components, loading software, configuration and its verification, and Xerox applications. You have the general site responsibility of ensuring that the right personnel, supplies, and network information are available. At the time of installation, you should do the following:

- Make sure that your system administrator is available during the loading of software.
- For software loading purposes, be prepared to provide Xerox personnel with network information from the pre-installation worksheets. Refer to the *Getting Ready for the DocuSP Installation* manual for specifics regarding network information.
- Designate two client workstations for downloading Xerox client software if applicable: one for initial system validation and another for use in operator training provided by your systems analyst.
- If your system will be connected to an IBM host through a channel, provide the host channel address, channel unit address, and data transfer mode.
- If your system will be connected to an IBM host through Socket TCP/IP, provide the host IP address and port number.
- Check the documentation and software kits with their packing lists for completeness.
- Load Xerox client software on any additional client workstations. Remember that you are responsible for supplying, installing, and maintaining your client workstations and the Ethernet local area network (LAN) that connects them with the printing system.

NOTE: *Have test jobs ready to run and your operators available for training.*

Defining the printer to the host for IPDS printing

Prior to installation of your printer, your host system must be configured to communicate with and print on an IPDS system. This requires defining several printer parameters to your host. The required information and configuration procedures differ according to your connectivity type (channel or TCP/IP), and your host and PSF environment. You will need to provide these parameters to your Xerox representative on installation day.

Software licensing

When your printer is purchased, a license is required to use the operating system software. The host ID is required to obtain the license. This license is enabled by entering an authorization text string at the printer controller keyboard. Your Xerox service representative obtains this license text string for you. Until this license string is entered, while you power on and boot the system, the printer remains in Disabled mode and cannot print.

Ongoing maintenance

After the installation of your Xerox DocuTech, there are a few ongoing tasks that must be performed. These tasks may include the following:

- Maintaining an adequate inventory of consumable supplies
- Overseeing routine maintenance and meter reporting
- Performing routine maintenance tasks such as replacing dry ink or adding fuser lubricant to the printer
- Cleaning the exterior surfaces of the system
- Arranging for additional operator training
- Ordering additional fonts
- Ordering additional documentation
- Placing service calls for hardware problems
- Obtaining assistance in solving software-related problems

As installation coordinator, it is your responsibility to designate the staff members and how many operators will be responsible for performing these tasks. Most maintenance tasks are covered in the initial operator training provided shortly after installation.

NOTE: *For more information about routine maintenance tasks, refer to the Maintenance chapter of this guide.*

6 Maintenance

This chapter describes support services available to customers. There is also a description of commonly used consumable supplies and a supplies checklist.

Xerox support services

Many services are provided in support of your printer. This section contains information on the following services:

- Customer Support Center
- Customer Education
- Supplies Order Service

Prior to installation, your sales representative is available to answer your questions about products, services, or billing. However, if you need assistance in resolving application-related problems or questions, call Customer Support (refer to the following section of this chapter). Your systems analyst is also available to assist you with applications development.

Customer support

The customer support center is available to address your application problems or to direct you to the appropriate documentation.

The key to effective use of the support center is correct identification of the problem. Before calling the support center, it is helpful to have the following information available:

- A list of any error messages
- An explanation of how output is different from what you expected
- An assessment of whether the symptoms follow a pattern or occur randomly
- A list of special conditions that may have caused the problem:
  - New applications
  - Changes made to the software
  - Recent service performed
  - Previous conditions under which the application has printed properly

To contact the U.S. Xerox Customer Support Center, call 1-800-821-2797. The Xerox Customer Support Center provides 24 hour support.

Operator training

Operator training is conducted either at your location or at a Xerox Customer Education Center shortly after the printer is installed. The training includes hands-on practice running basic jobs, performing routine maintenance, and solving problems. Determine the number of operators you want to attend the initial training and schedule training dates and times through your sales representative.

Supplies service

To avoid downtime, always have an adequate amount of the necessary supplies. To do this, you need to establish a procedure for checking and ordering supplies. A supplies checklist is provided at the end of this chapter to help you with this task. It lists the supplies needed for the printer and contains a column for you to enter the date when you want to place the order and a column to record the date of the actual order. The consumable supplies table, also located at the end of this chapter, contains a list of supplies available for the printer.

It is important that you check your supplies regularly and order before you run out. Plan on approximately five working days for the delivery after placing the order. You can make arrangements to receive them sooner in emergency situations.

Your sales representative can help you submit the initial order of supplies needed for installation. These items include paper, dry ink, fuser blend, and developer.

Once your printer volume is established, planning ahead and buying Xerox supplies in quantity can save you money. Your supply specialists can help you.

NOTE: *The supplies resources listed below are for the United States only. Multinational customers should contact their local representatives for supplies ordering information.*

There are two centers available to assist you:

- To order Xerox paper, transparencies, labels, dry ink, developer, fuser lubricant, and diskettes, call the Xerox Supply Center weekdays between 7:30 a.m. and 6:00 p.m., Pacific Standard time at 1-800-822-2200.

  If you prefer, you may mail orders to the following address:

  Xerox Corporation
  P.O. Box 25075
  Santa Ana, CA 92799-5075

- To order cleaning supplies, call the Xerox Customer Parts and Product Support Center weekdays between 5:30 a.m. and 5:00 p.m., Eastern Standard time, at 1-800-828-5881 (U.S. only).

  You may also mail cleaning supplies orders to the following address:

  Xerox Corporation
  Parts Marketing Center Building 214-07S
  P.O. Box 1020
  Webster NY 14580

  Please provide the following information when placing orders:

  - Your customer number (provided by your sales representative)
  - Your printer model
  - Your supply order, including the following information:
    - Item name
    - Part number
    - Quantity desired
    - If your company requires a purchase order for payment of an invoice, you need to provide the purchase order number to Xerox at the time you place the order.

Routine maintenance

There are a number of routine maintenance tasks that must be performed to ensure maximum efficiency of your printer. These tasks include the following:

- Adding dry ink to your printer
- Adding fuser lubricant
- Replacing the dry ink and developer waste containers
- Cleaning the exterior surfaces of the system
- Changing the CCU for colored dry ink

Step-by-step instructions on performing these routine maintenance tasks are contained in your DocuTech 128/155/180 HLC Operator Guide.

You need to decide how many operators will be responsible for performing these maintenance tasks. Most maintenance procedures are covered in the initial operator training provided shortly after installation.

Meter reading and reporting

As print jobs are processed, the DocuSP controller accumulates, saves, and maintains usage data. During the last five working days of each month, you need to review and transmit the data to Xerox for billing purposes. Refer to the section on Billing in the Help on the DocuSP controller for complete information on how to view and print the billing meter readings.

Consumable supplies table

The following table lists the supplies that are available from Xerox for your printer. Use this table to help you determine your printer needs.

The following symbols are used in the table:

* 5/16-inch drilled holes

** Rainbow pack contains 750 sheets each of blue and yellow, 500 sheets each of green and pink, and 250 sheets each of buff, gray, goldenrod, and ivory.

NOTE: *Non-United States customers: The part numbers in this table are for the United States only. Contact your local representative for supplies ordering information.*

Table 6-1. Consumable supplies

Item	Description	U.S. part number
Paper	Xerox paper quantities are 10 reams (5,000 sheets) to a carton unless otherwise noted below	
8.5 x 11 inch	Xerox Business 4200 Paper	3R2047
A4	Xerox Business 4200 Paper	3R2594
8.5 x 14 inch	Xerox Business 4200 Paper	3R2051
11 x 17 inch	Xerox Business 4200 Paper	3R3761
8.5 x 11 inch	Xerox Business 4200 Paper, 3-hole	3R2641
8.5 x 11 inch	Dual Purpose Colors, Blue	3R11050
8.5 x 11 inch	Dual Purpose Colors, Blue, 3-hole	3R11062
8.5 x 14 inch	Dual Purpose Colors, Blue	3R11074
8.5 x 11 inch	Dual Purpose Colors, Green	3R11051
8.5 x 11 inch	Dual Purpose Colors, Green, 3-hole	3R11063
8.5 x 14 inch	Dual Purpose Colors, Green	3R11075
8.5 x 11 inch	Dual Purpose Colors, Pink	3R11052
8.5 x 11 inch	Dual Purpose Colors, Pink, 3-hole	3R11064
8.5 x 14 inch	Dual Purpose Colors, Pink	3R11076
8.5 x 11 inch	Dual Purpose Colors, Yellow	3R11053
8.5 x 11 inch	Dual Purpose Colors, Yellow, 3-hole	3R11065
8.5 x 14 inch	Dual Purpose Colors, Yellow 3	R311077
8.5 x 11 inch	Dual Purpose Colors, Buff	3R11054
8.5 x 11 inch	Dual Purpose Colors, Buff, 3-hole	3R11066
8.5 x 14 inch	Dual Purpose Colors, Buff	3R11078
8.5 x 11 inch	Dual Purpose Colors, Goldenrod	3R11055
8.5 x 11 inch	Dual Purpose Colors, Goldenrod, 3-hole	3R11067
8.5 x 14 inch	Dual Purpose Colors, Goldenrod	3R11079
8.5 x 11 inch	Dual Purpose Colors, Ivory	3R11056
8.5 x 11 inch	Dual Purpose Colors, Ivory, 3-hole	3R11068
8.5 x 14 inch	Dual Purpose Colors, Ivory	3R11080

Item	Description	U.S. part number
8.5 x 11 inch	Dual Purpose Colors, Gray	3R11057
8.5 x 11 inch	Dual Purpose Colors, Gray, 3-hole	3R11069
8.5 x 14 inch	Dual Purpose Colors, Gray	3R11081
8.5 x 11 inch	10 Series Smooth	3R54
8.5 x 11 inch	Xerox Business 4200 Paper, reinforced 3-hole	3R4299
Image LX	White 8.5 x 11 inch 3-hole (5000 sheets/carton)	3R11541
Image LX	White 8.5 x 14 inch (4000 sheets/ carton)	3R11542
Image LX	White 11 x 17 inch (4000 sheets/ carton)	3R11543
Transparencies	Xerox transparencies are packaged 100 sheets to a box	
8.5 x 11 inch	Clear, with a white strip on the edge	3R2780
Labels (Gummed)	Xerox labels are packaged 100 sheets to a box	
8.5 x 11 inch	33 labels per sheet	3R3139
8.5 x 11 inch	6 labels per sheet	3R3146
8.5 x 11 inch	Custom form (uncut)	Contact Xerox Supplies Order Service
Dry Ink Black	Packaged 3 cartridges per carton. The consumption rate is approximately one carton per 300,000 pages. Area coverage is 6% black only	6R206
Dry Ink Blue	1 cartridge in Starter Kit; otherwise, 3 cartridges per carton; 300K HLC prints per carton; area coverage is 1.5%	6R1191
Dry Ink Royal Blue	1 cartridge in Starter Kit; otherwise, 3 cartridges per carton; 300K HLC prints per carton; area coverage is 1.5%	6R1255

Item	Description	U.S. part number
Dry Ink Cardinal Red	1 cartridge in Starter Kit; otherwise, 3 cartridges per carton; 300K HLC prints per carton; area coverage is 1.5%	6R1277
Dry Ink Red	1 cartridge in Starter Kit; otherwise, 3 cartridges per carton; 300K HLC prints per carton; area coverage is 1.5%	6R1192
Dry Ink Green	1 cartridge in Starter Kit; otherwise, 3 cartridges per carton; 300K HLC prints per carton ; area coverage is 1.5%	6R1193
Dry Ink Cyan	1 cartridge in Starter Kit; otherwise, 3 cartridges per carton; 300K HLC prints per carton ; area coverage is 1.5%	6R1284
Black Developer	Packaged 1 bottle per carton and orderable by the customer. Developer effective life is dependent upon the number of charged images printed and the size of the stock. Xerox developer is guaranteed by Xerox for 500,000 pages of 8.5 x 11 inches (216 x 279 mm or A4) stock. Effective life is approximately one carton per 500,000 pages.	5R161
Blue Developer	Color developer is ordered and installed by the Xerox Service Representative. Packaged 1 bottle per carton. Developer effective life is the same as above.	5R688
Royal Blue Developer		5R715
Cardinal Red Developer		5R717
Red Developer		5R689
Green Developer		5R690
Cyan Developer		5R719
Fuser Blend*	3 bottles in Install Kit. Consumption rate is approximately one bottle per 200,000 pages. 1 - 1 liter bottle: 6 - 1 liter bottles:	 8R12938 8R12939

Item	Description	U.S. part number
Fuser Shield	Consumption rate is approximately one bottle per 200,000 pages. 1 bottle: 6 bottles:	 8R4077 8R7618
Dry ink waste bottle	1 bottle in machine. Capacity is approximately 500,000 impressions per bottle. The Xerox Service Representative maintains the customer supply.	93K1403
HLC developer waste bottle	4 bottles. Capacity is approximately 800,000 highlight color prints at 1.5% area coverage.	604K24870
Stitcher wire	Packaged 1 reel per carton. Consumption rate is approximately 32,000 stitches per reel.	8R1174
Black binder tape	Packaged 1 reel per carton. Consumption rate is approximately 425 binds per carton.	8R7186
White binder tape		8R7187
Gray binder tape		8R7188
Blue binder tape		8R7189
Cleaning supplies	Foam-tipped swabs	99P87256
	Lint-free towels	35P2163
Cartridge tape	4 mm blank cartridge, 12-24 GB	109R00314

CAUTION: *Do not use DT/DP Fuser Agent 8R2955 in a DT HLC printer. Also, Fuser Blend and Fuser Shield are not interchangeable.*

Use the following table to help record the supplies and accessories you require, the date on which the order should be placed, and the actual date of the order.

Table 6-2. Supplies checklist

Item	Description	Quantity	Date of order	Date ordered
Paper				
Black dry ink				
Blue dry ink				
Royal Blue dry ink				
Cardinal Red dry ink				
Red dry ink				
Green dry ink				
Cyan dry ink				
Black developer				
Color developer (Xerox Service Representative maintains supply)				
Dry ink waste container (Xerox Service Representative maintains supply at the customer site)				
HLC developer waste bottle				
Stitcher wire				
Binder tape				
Fuser lubricant				
Labels				

Item	Description	Quantity	Date of order	Date ordered
Transparencies				
Cleaning supplies				
Other				

XEROX®