Xerox Corporation
701 S. Aviation Boulevard
El Segundo, CA 90245

Printed in the United States of America

FEDERAL COMMUNICATIONS COMMISSION NOTICE

Part 15 of the Federal Communications Commission (FCC) Rules and Regulations has established Radio Frequency (RF) emission limits to provide an interference-free radio frequency spectrum. Many electronic devices, including printers, generate RF energy incidental to their intended function and are, therefore, covered by these rules.

Class A Equipment

This equipment has been tested and found to comply with the limits for a Class A digital device, pursuant to Part 15 of the FCC Rules. These limits are designed to provide reasonable protection against harmful interference when the equipment is operated in a commercial environment. This equipment generates, uses,

Modifications

The FCC requires the user to be notified that any changes or modifications made to this device that are not expressly approved by Xerox Corporation may void the user’s authority to operate the equipment.

Cables

Connections to this device must be shielded cables with metallic RFI/EMI connector hoods in order to maintain compliance with FCC Rules and Regulations.

CANADIAN NOTICE

This digital apparatus does not exceed the Class A limits for radio noise emissions from digital apparatus set out in the Radio interference regulations of the Canadian Department of Communications.

AVIS CANADIEN

B

WARNING: The label shown above is intended as a warning to persons disassembling the Raster Laser Scanner unit for internal alignment or repair purposes. It does not apply to any of

CLASS I LASER PRODUCT

The printer is certified to comply with laser product performance standards set by the U.S. Department of Health and Human Services as a Class I laser product. This means that this is a class of laser product that does not emit hazardous laser radiation; this is possible only because the laser beam is totally enclosed during all modes of customer operation.

The laser and output of the Laser Scanner produces a beam that, if looked into, could

G **CAUTION:** When servicing the machine or laser module, follow the procedures specified in the manual and there will

B **WARNING:** Use of controls, adjustments or performance of procedures other than those specified in this manual

RELATED PUBLICATIONS

PostScript and PCL 5 references include:

- *PostScript Language Reference Manual*, Second Edition 1990, Adobe Systems Incorporated, Addison-Wesley Publishing Company, Inc., Third printing April, 1991.
- Hewlett-Packard *PCL 5 Printer Language Technical Reference Manual* (Part number

WHAT THIS GUIDE CONTAINS

The *Operator Guide* is divided into the following chapters and appendices:

Chapter 1, Overview and Installation Presents features, options, and additional specifications. Laser safety information is presented in this chapter. This chapter also provides step by step instructions for installing and setting up your printer. Information on how to load special papers in the Paper Trays or Manual Feed Tray is included.

Chapter 2, Using the Control Panel Provides an overview of the Control Panel Main Menu and associated lower level menus, and provides a detailed explanation of each menu item and its associated option. The procedures for accessing, navigating, and changing menu settings are described.

Chapter 3, Configuring the Interface Card Describes the twinax and coax interface cards, and the IPDS module.

Chapter 4, Printing Explains how to print reports and how to prepare and print a job. Printing with the Manual Feed Tray is explained.

Chapter 5, Care and Maintenance Explains how to care and maintain your printer to ensure optimum performance.

Appendix A, Printer Specifications Provides

Appendix E, Options and Supplies: Ordering Information Explains how to upgrade the printer and order supplies and accessories.

Appendix F, Serial/Parallel Interface Support Provides information on interface connections and pin assignments.

Appendix G, Paper Facts Provides information on paper and envelope types to use with the printer.

Appendix H, PCL 5 Symbol Sets Provides tables showing the available symbol sets and their hexadecimal equivalents.

Appendix I, PCL 5 Command Set Provides a quick

CONVENTIONS

The following conventions are used in this

Convention	Use
Control Panel Keys	The names of the control panel keys appear in boldface. For example, “Press the **Menu** key.”
Factory Default Settings	Factory default settings appear in italicized, boldface type.
NOTE	A note indicates information of interest that is related to the
REMINDER	A reminder is used to remind you of previous information or of existing conditions.

The following symbols are used in this guide:

A **IMPORTANT:** The exclamation point indicates information of importance.

G **CAUTION:** A caution contains information to prevent equipment

B **WARNING:** A warning contains information to prevent personal

CONTENTS

Chapter 2 2-1

USING THE CONTROL PANEL

This chapter provides the following information:

- An overview of the control panel keys
- Menus: Overview, examples, and the procedures to print the menus
- A detailed explanation for each menu item and associated options
- The procedures for entering the menus and changing the printer configuration
- Maps detailing the path used to navigate the menus
- Examples that show how to change the printer configuration:

  A. Setting the default paper tray and the automatic tray swap setting.

  B. Turning off the Start Page

  C. Setting the default font for PCL 5 mode.

OVERVIEW OF THE CONTROL PANEL KEYS

Table 2-1 is an overview of the keys on the control panel and their functions when the printer is Online, Offline or when one of the

Table 2-1
Overview of Keys

	Printer Modes		
KEY	**ONLINE**	**OFFLINE**	**MENU**
Online	Toggles the printer status between	Toggles the printer status between	Exits the control panel menu mode.
Help	Has no function in	Has no function in	Prints a menu map of the current control panel menu: Control Panel Main Menu, Printer Setup Menu, or Interface

Note: Factory default settings can be restored by pressing **Online** and **Help** while switching the printer

Continued

Table 2-1
Overview of Keys

KEY	Printer Modes		
	ONLINE	**OFFLINE**	**MENU**
Menu	Enters the control panel	Enters the control panel	Displays the top level of the control
Reset	Has no function in	In SCS, IPDS, or PCL 5 mode, prints any data remaining in the printer. In PostScript mode, stops present job. “Flushing Job” displays until end of job is reached.	Has no function in

Continued

Table 2-1
Overview of Keys

KEY	Printer Modes		
	ONLINE	**OFFLINE**	**MENU**
Enter	Has no function in	Has no function in	Selects the displayed menu option if it is selectable, i.e.,
Note: If the menu item is a heading, i.e. leads into another group of options, this button causes the menu display to move to the next lower level			
Esc	Has no function in	Has no function in	Causes the current menu item to change to the previous menu
Note: If pressed at the top of the main menu, you exit the control panel menu and the printer returns to the previous mode, i.e. ONLINE or OFFLINE.			

Continued

Table 2-1
Overview of Keys

KEY	Printer Modes		
	ONLINE	**OFFLINE**	**MENU**
Up	Has no function in	Has no function in	Scrolls the menu upward.
	Note: When pressed at the start of a menu level, the message “Start of List” momentarily displays on the second line of the panel display. If the menu item requires a numeric response, such		
Down	Has no function in	Has no function in	Scrolls the menu
	Note: When pressed at the end of a menu level, the message “End of List” momentarily displays on the second line of the panel display. If the menu item requires a numeric response, such as point size, the value displayed decreases by one		

MENUS

The printer is automatically placed in the menu mode when the **Menu** key is pressed at the control panel. This section provides examples of the three menus that are accessed through the control panel and the procedures for printing a selected menu.

F Control Panel Main Menu

The notations on the following menu maps represent the following moves or actions:

A vertical arrow illustrates a move made with the ↑↓ **Up** or **Down** arrows

A horizontal arrow illustrates a move to a lower level heading. ←→

An asterisk '*' preceding the menu option indicates that this setting is the default. Default settings are printed in italicized boldface type in this guide.

Selecting the PRINTOUT MENU option prints a selected menu map.

Control Panel Main Menu

Pressing the **Menu** key automatically takes the printer offline and displays the first

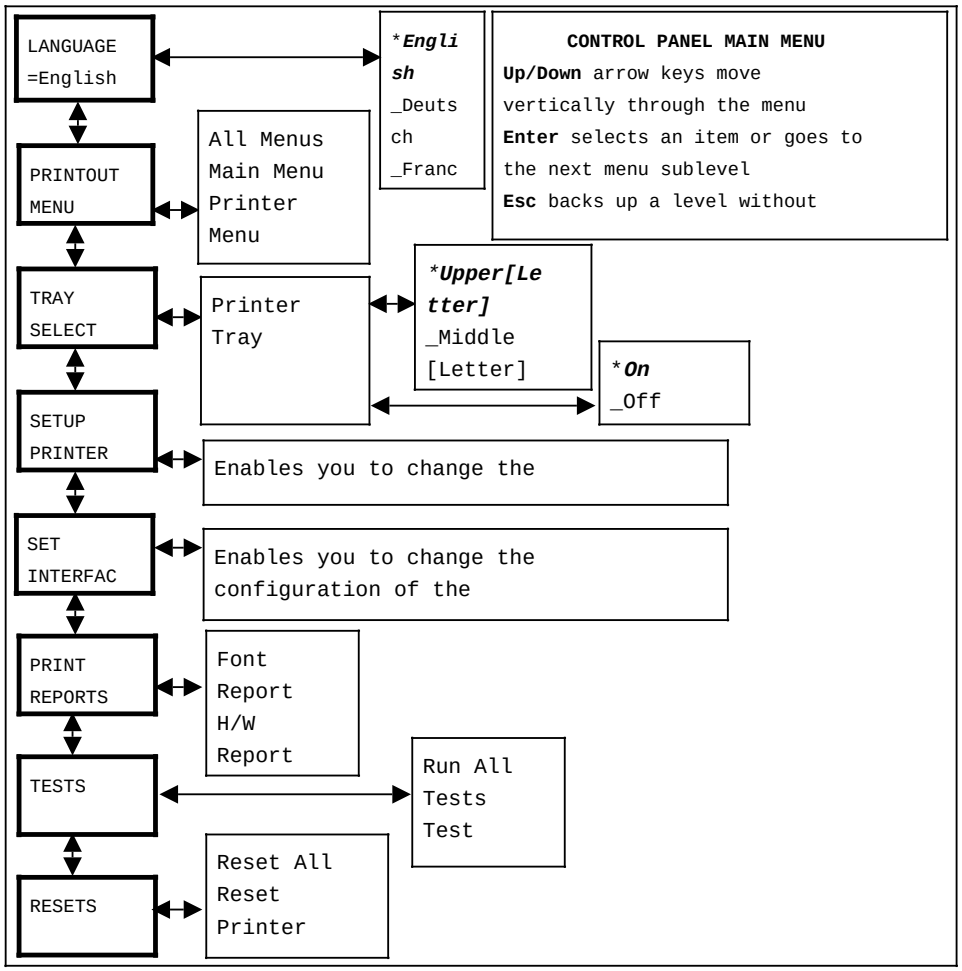

Figure 2-1. Control Panel Main Menu

Printer Setup Menu

The Printer Setup Menu displays the current printer configuration when the **Enter** key is

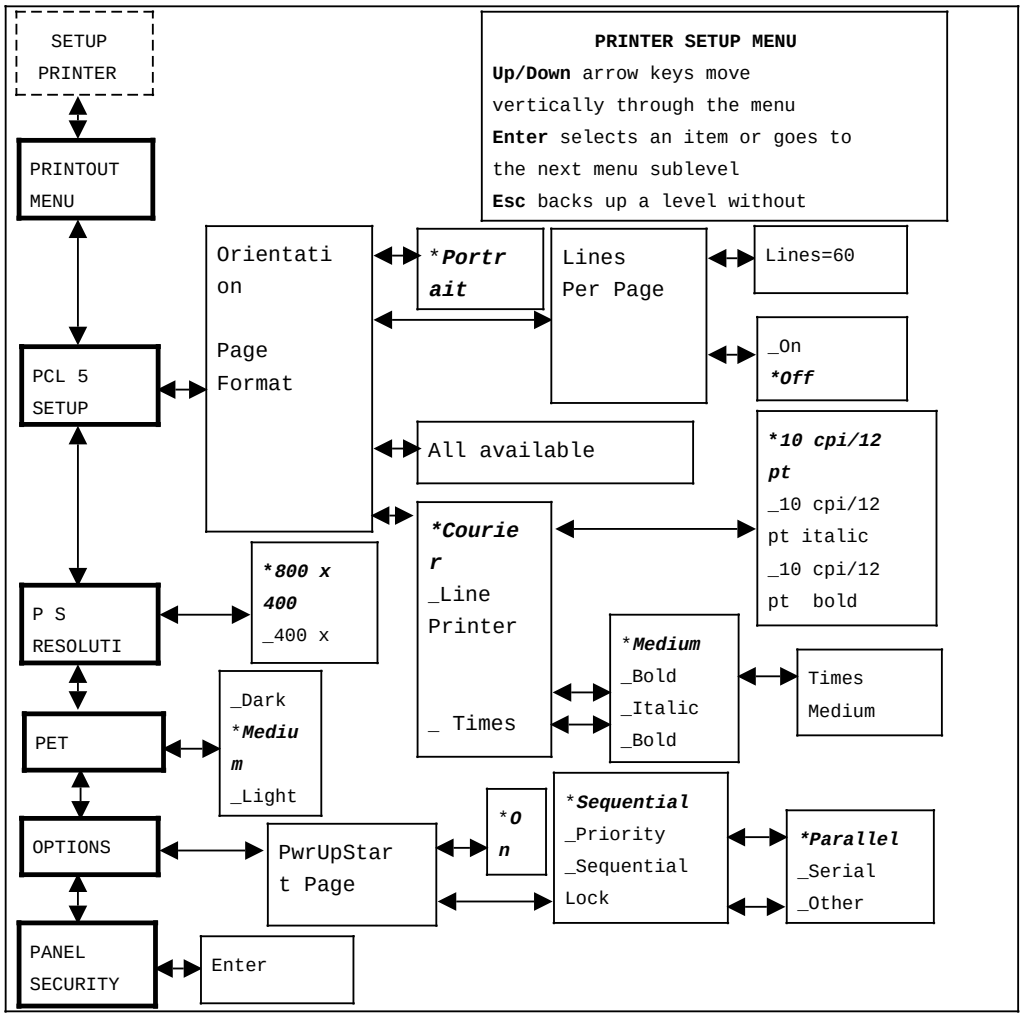

Figure 2-2. Printer Setup Menu

Interface Setup Menu

The Interface Setup Menu (see Figure 2-3) displays when the **Enter** key is pressed at the SET INTERFACE heading at the Control Panel Main Menu. The Interface Setup Menu reports the

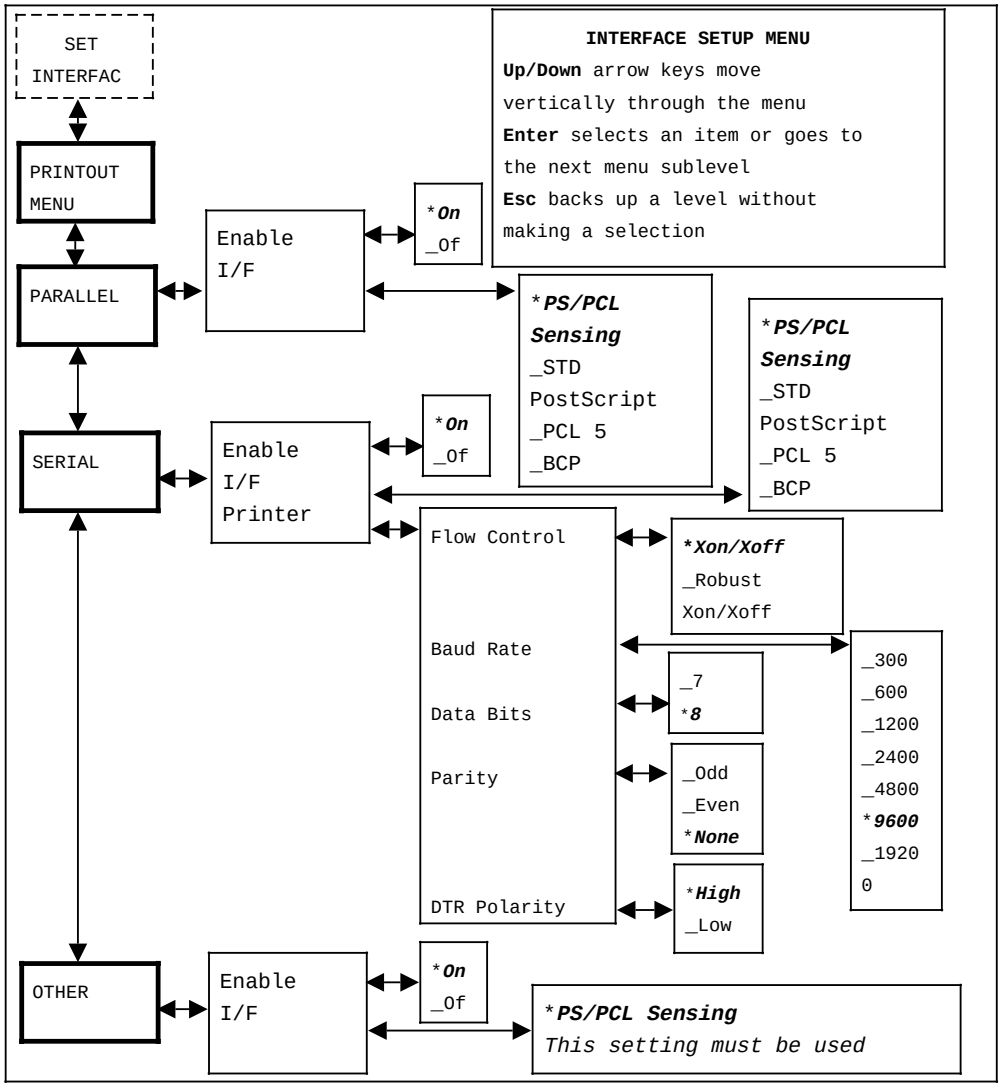

Figure 2-3. Interface Setup Menu

PRINTING THE MENUS

The menus contain information on the current printer environment.

The menus that may be printed include the:

- Control Panel Main Menu
- Printer Setup Menu
- Interface Setup Menu

Printing All the Menus

Step 1. Press the **Menu** key. The printer is automatically placed offline and in menu mode. The display reads:

```
LANGUAGE
=English
```

Step 2. Press the **Down** arrow key. The display reads:

```
PRINTOUT MENU
```

Step 3. Press the **Enter** key. The display reads:

```
All Menus
```

Step 4. Press the **Enter** key. The menus print automatically. The display reads:

```
All Menus
Printing...
```

When all the menus, Control Panel Main Menu,

Printing a Selected Menu

Step 1. Press the **Menu** key. The printer is automatically placed offline and in menu mode. The display reads:

LANGUAGE
=English

Step 2. Press the **Down** arrow key. The display reads:

PRINTOUT MENU

Step 3. Press the **Enter** key. The display reads:

All Menus

Step 4. Press the **Down** arrow key until the name of the setup menu you wish to print displays. The following setup menus are available:

- Main Menu
- Printer Menu
- Interface Menu

Step 5. Press the **Enter** key. The menu prints automatically. The display reads:

Printer Menu
Printing...

Printing Help Pages

Pressing the **Help** key when you have one of the menus (Control Panel Main Menu, Printer Setup Menu, Interface Setup Menu) displayed at the control panel, gives you an immediate printout of the layout for the currently displayed menu.

This feature allows you to print the current menu map without losing your place in the menu setup. This Help feature can assist you as you navigate the configuration menus.

It is recommended to use the **Help** key only when the printer is not processing a job.

CONTROL PANEL MAIN MENU ITEM DESCRIPTIONS

The Control Panel Main Menu includes these items:

- Language
- Printout Menu
- Tray Select
- Setup Printer (lower level menu allows you to change the printer configuration)
- Set Interface (lower level menu allows you to change the communication interfaces)
- Print Reports
- Tests

Language

The language item selection determines which of five languages is to be used for the message display and the printer reports. The available languages are ***English**, Deutsch, Francais, Italiano, or Espanol.

Printout Menu

This item allows you to print the menu structure and review the configuration settings for any menu level. You can select from the following options:

- **All Menus**--Prints out all menu structures (Control Panel Main Menu, Printer Setup Menu, and Interface Setup Menu). The display reads:

  All Menus
  Printing...

- **Control Panel Main Menu**--Prints out the Control Panel Main Menu structure and configuration settings. The display reads:

  Main Menu
  Printing...

- **Printer Menu**--Prints out the Printer Setup Menu structure and configuration settings. The display reads:

Tray Select

Standard paper trays are identified on the menu by where the tray is located in the printer. For the 4219/MRP, the three possible paper tray locations are the Upper, Middle, and Lower tray slots. For the 4215/MRP, the two possible paper tray locations are the Upper and Lower tray slots. The factory default is the ***Upper*** tray.

Manual feed trays are identified on the menu as Manual Feed.

The Tray Select menu item allows you to select the following:

Printer Tray The Printer Tray menu item allows you to select the default paper tray to use for normal printing operations.

The size paper the tray holds is included in the tray description.

Possible paper sizes for the Manual Feed Tray include:

- Letter (8.5 x 11 inches)
- Legal (8.5 x 14 inches)
- Exec (7.5 x 10.5 inches)
- Ledger (11 x 17 inches)
- Folio (8.5 x 13 inches)
- A3 (297 x 420 mm)
- A4 (210 x 297 mm)
- A5 (148 x 210 mm)
- B4 (257 x 364 mm)
- B5 (182 x 257 mm)

Possible envelope sizes for the Manual Feed Tray include:

- COM10 (4.125 x 9.5 inches)
- DL (110 x 220 millimeters)
- C5 (162 x 229 millimeters)

NOTE: For directions on how to load paper and

Auto Tray Swap The Auto Tray Swap menu item allows you to switch automatically to another tray, containing the same size paper, when the active tray is empty. The Auto Tray Swap menu item selects the order in which trays are used as the paper source. For example:

- The Off selection means paper is fed from one tray only.
- The On selection means when the paper tray empties, the next paper tray with the correct size paper becomes active. ***On** is the factory default setting.

If you want Auto Tray Swap to utilize all available paper trays, all trays should contain the same size paper.

Print Reports

You can print several reports from the control panel. This section briefly describes the information contained in each report. The reports you can print include:

- Font Report
- Hardware Status Report
- Error Log

Hardware Status Report This report provides information on the status of the printer and all installed options. The report sections include:

- Statistical data
- Printer status

Error Log Printing this report gives you a listing of the latest errors and the approximate page count of where the error occurred.

Other I/O Log Printing this report gives you the status of the twinax or coax interface.

Tests

The printer and twinax or coax interfaces may be manually tested from the control panel. A check is performed on each device requested: Printer or interface or both. After all requested tests are completed, the Hardware Status Report prints. See Figure 4-13 in Chapter 4, “Printing,” for an example of the Hardware Status Report.

The Tests options include:

Resets

The printer configuration settings and the interface configuration settings may be reset to power-on defaults from the control panel.

The following resets are possible:

- **Reset All**--Resets the printer and all installed options, in turn, to the power-on defaults. The message display indicates that the resets are being performed.
- **Reset Printer**--Resets the printer to the power-on defaults. The message display

SETUP PRINTER MENU ITEM DESCRIPTIONS

The Setup Printer Menu includes these items:

- Printout menu option
- PCL 5 setup
- Print resolution settings
- Options settings

PCL 5 Setup

The options available through the PCL 5 SETUP item affect the PCL 5 command set only. The PCL 5 Setup allows you to select the following:

- Print orientation
- Page formatting
- Symbol set
- Fonts

Orientation Orientation refers to the direction of print on a page. Portrait orientation allows you to print lines parallel to the short

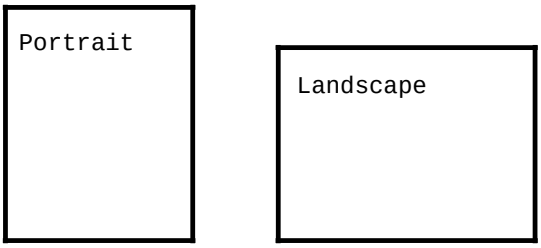

Page Format The following page formatting options can be set for PCL 5:

- The Lines Per Page formatting option controls the distance between lines on the page as well as the number of lines per page, from 5 to 128. The factory default is ***60*** lines per page. When 60 lines per page is used, line one of text is placed at the top margin, line sixty of text is placed at the bottom margin, and the remaining lines are spaced equally between the first and last lines.
- The Line Wrap page formatting option can be set to On or Off. If the Line Wrap is enabled, any character that would cause the

Symbol Set When you select a symbol set for the PCL 5 mode, you are selecting a subset of the available alphabetic and numeric characters, punctuation, and special-purpose symbols in a font. ***ROMAN-8*** is the factory default symbol set. Table 2-2 lists the resident symbol sets

Table 2-2
PCL 5 Resident Symbol Sets

Internal scalable fonts and bit-mapped fonts	Internal scalable fonts
ROMAN-8	Ventura Math
ECMA94 Latin 1	Ventura US
PC8	PS Text
PC8DN	PI Font
PC850	Windows
GERMAN	Ventura Intl
Legal	PS Math
ISOnn1*	Math-8
Spanish	Microsoft Pub
	Desktop

* nn1= 2, 4, 6 (US ASCII), 10, 11, 14, 15, 16, 17, 21, 25, 57, 60, 61, 69, 84, or 85.

Fonts The Fonts selection allows you to select any of the following fonts as the default font when using the PCL 5 mode:

- Standard scalable fonts available are Times and Univers

- Standard bit-mapped fonts are LinePrinter in 16.66cpi/8pt and Courier.

  If you select Courier as your default font, you can change the pitch (characters per inch, cpi) and point size (measure of the vertical height of a character) and stroke weight from medium (no letter designation) to bold (Bld) or italic (Itl).

  Pitch and point sizes available with the Courier font are:

  - 10cpi/12pt (factory default)
  - 10cpi/12pt Itl
  - 10cpi/12pt Bld
  - 12cpi/10pt
  - 12cpi/10pt Itl
  - 12cpi/10pt Bld

Refer to Chapter 4, “Printing,” for font samples.

PostScript (P S) Resolution

The printer has high resolution mode PostScript printing. The modes are:

- ***800 x 400***
- 400 x 400
- 300 x 300

The printer uses an innovative compression

Refer to Table 2-3 for memory requirements and the resolutions available for the different

Table 2-3
PostScript Print Resolution

Paper Size	8MB	12MB	20MB
Executive	800x400	800x400	800x400
Folio	800x400	800x400	800x400
Letter	800x400	800x400	800x400
Legal	800x400	800x400	800x400
Ledger	800x400**	800x400	800x400
A5	800x400	800x400	800x400
A4	800x400	800x400	800x400
A3	800x400**	800x400	800x400
B5	800x400	800x400	800x400
B4	800x400**	800x400	800x400
COM10	800x400	800x400	800x400
DL	800x400	800x400	800x400
C5	800x400	800x400	800x400

*** The printer attempts to use 800x400 resolution. If the printer cannot successfully print the page in 800x400 resolution, the printer prints the page at 400x400 resolution. If this occurs, some loss of print quality may occur. The page may be reprinted at 400x400 resolution to obtain the best possible print quality.

Notes on Other Resolutions

PCL 5 Resolution Pages generated with the PCL 5

IPDS Resolution Pages generated with IPDS print in 300 x 300 resolution in all memory configurations.

PET

Xerox Print Enhancement Technology (PET) enhances the quality of documents printed at 300 dots per inch (dpi). It is available in SCS, IPDS, PostScript mode and PCL mode. The printer is optimized for medium, but the dark setting normally gives the best results when printing text and graphics. If however, in printing certain graphics or photographic images, you want to change the results, you can try a lighter PET setting, or turn PET off. Your PET choices are:

- Dark
- ****Medium***
- Light
- Off

Options

The Options Menu selection allows you to enable or disable the Start Page and select your communication priority scheme.

PwrUp Start Page If enabled, when you power on your printer, the Start Page automatically prints after the initial diagnostic tests are performed.

new characters. The execution of a print job is determined by which port polling scheme is selected. The four port polling schemes are:

- **Sequential**--this scheme assigns no priority to any port and executes the first print job received from any enabled port and then advances to the next enabled port in the sequence. The sequential polling is: Parallel, Serial, AppleTalk, Other I/O, and then back to Parallel. ****Sequential*** is the factory default.

- **Priority**--this scheme allows you to assign a high priority to one enabled port (Parallel, AppleTalk, Serial, or Other I/O). All other ports have the same lower priority. If new jobs are received from the priority port before the jobs on the other ports have begun executing, the port with the high priority gets its print jobs printed first and bumps other jobs with lower priority ports down the queue.

Panel Security

You can lock the printer control panel so changes to the printer settings are disallowed unless the printer is unlocked. Scrolling through the selections and printing reports and menu maps is still available.

You can access the lock feature from the printer keypad. The printer is locked or unlocked by pressing the Up and Down arrow keys in the following sequence:

(down, down, up, up)

An asterisk '*' appears each time you press an arrow key. Press **Enter** after the sequence.

You can restore the factory defaults to unlock the printer; however, all other original

SET INTERFACE MENU ITEM DESCRIPTIONS

Your printer comes with twinax or coax, parallel Centronics and serial (RS-232C) interfaces enabled. Use this menu to configure the interfaces to meet the needs of your operation.

Serial and parallel Centronics communication use special communication parameters. Refer to your host computer software manuals for details and make sure your computer and your printer are using identical settings for each of the serial and parallel Centronics parameters. In most cases, you can use the factory default settings because they are suitable for most office situations.

Parallel, Serial, and Other I/O (Twinax or Coax)

The parallel, serial and Other I/O (twinax or coax) interface menu items have two common options:

- Enable Interface (I/F)
- Printer Type

The serial menu item has an additional option: Serial Setup.

Enable Interface (I/F) All interfaces (parallel, serial, and Other I/O) are enabled (*_**On**_) when you receive your printer. If you change this setting to Off, the selected interface is disabled.

without using the control panel or remote software commands. ***PS/PCL Sensing*** is the factory default.

NOTE: The printer type for the Other I/O must be set to ***PS/PCL Sensing***.

F **Standard (STD) PostScript--**with this setting, the printer recognizes only the standard PostScript page description language to describe the appearance of a printed page. Some of the 256 characters used by PostScript are interpreted as control functions only and cannot be transmitted as data. The control functions are:

- End of job
- Status (e.g., printer idle)
- Abort (e.g., cancel)
- Xon
- Xoff

F **PCL 5--**with this setting, the printer recognizes only the PCL 5 command set for defining a page, selecting fonts, etc.

F **Binary Communications Protocol (BCP) PostScript--**allows any of the 256 possible 8-bit values to be transmitted as data and allows certain characters to also specify control functions, such as:

- End of job
- Status (e.g., printer idle)
- Abort (e.g., cancel)
- Xon

- **HexDumpMode--**this setting is a data analysis tool that diagnoses application software related problems and communication problems.
- **Tagged Binary Communications Protocol PostScript (TBCP PS)--**allows individual applications to enable or disable binary communications on a per job basis with begin and end protocol functions. All 256 characters can be interpreted as data and some can also be interpreted as control functions. TBCP PostScript has the same control functions as BCP PostScript plus the begin and end protocol functions.

Serial Setup

The following serial interface parameters may be configured to match the settings on your host computer:

- Flow control
- Baud rate
- Data bits
- Parity
- Data Terminal Ready (DTR) Polarity

Flow Control The Flow Control menu item regulates the flow of data to the printer for the serial connection. The following communication protocols can be selected:

- **Xon/Xoff**--this is a data stream handshake where the printer sends an Xon (DC1; 11HEX)

- **Robust Xon/Xoff**--this data stream handshake is an extension of the Xon/Xoff data stream handshake. If no data is received within one second of the transmission of an Xon, it sends additional Xon characters at one second intervals.

- **Data Terminal Ready (DTR)**--the DTR line indicates whether or not the printer can receive data (READY) or not (BUSY). When the printer is READY, the DTR signal switches to a HIGH state (unless the DTR line has been set to inverted operation, in which it switches to a low state) as a request for data.

  The printer requests data when the print buffer is near empty.

  The printer switches DTR to BUSY when the print buffer is near full. When the printer is turned on, the DTR signal is held at BUSY until the printer has completed SELF TEST and WARM UP.

Baud Rate (Serial) The Baud Rate is the rate at which the information is sent from the host computer to the printer. Baud rate is measured in bits per second (bps). The factory default setting is ***9600*** and this setting is normally appropriate, but the setting must correspond to the baud rate setting at the host computer.

The following baud rates are supported: 300, 600, 1200, 2400, 4800, 9600, 19200, and 38400.

Data Bits (Serial) The serial Data Bits menu

The parity on the printer should match the setting on your host computer. The settings for parity are: Odd, Even, or None. ***None** is the factory default.

DTR Polarity The Data Terminal Ready (DTR) Polarity menu item allows you to select whether the DTR line on the serial interface is high or low when the printer is ready to receive data. The host setting must match the printer setting. ***High** is the factory default.

PRINTER CONFIGURATION

Once the physical components of the printer are connected, the printer software may need to be set up, or configured, to meet the needs of your office. By configuring your printer, you are establishing your own default settings. These settings remain unchanged even through a power off and on cycle.

Some of the printer configuration options deal with the print functions, such as:

- Printer language
- Tray selection
- PCL 5 font and page format settings
- Print resolution
- Automatic printing of the Start Page at

Changing the Printer Configuration at the Control Panel

This section shows which keys on the control panel are used for accessing the menus, advancing through the menu items, and, if applicable, changing the configuration settings.

If necessary, refer to “Control Panel,” in Chapter 1, “Overview and Installation,” for a diagram showing the location of the control panel keys.

Accessing the menu Use the following keys at the printer control panel to access the menu:

1. Press and release the **Menu** key. The printer is automatically placed offline and in the menu mode. The first item at the Control Panel Main Menu is displayed. The display reads:

   LANGUAGE
   =English

Selecting and Changing the Printer Configuration Settings

2. When the Control Panel Main Menu is displayed, the following keys on the control panel are used to move through the different menu levels:

   Use the **Up** arrow key to move to the previous menu item. An arrow pointing up is displayed in the last position of the

Use the **Up** arrow key to increase the value of the active (flashing) number in a number sequence by one when a numeric entry is required (i.e., lines per page).

Use the **Down** arrow key to decrease the value of the displayed number by one when a numeric entry is required (i.e., lines per page).

Use the **Enter** key to set a single numeric entry in a number sequence and advance to the next available number in the sequence. When **Enter** is pressed after the last number in the sequence, the numeric entry is set and the previous menu item displays.

Use the **Enter** key to move forward to another group of options associated with the menu heading currently displayed. This group is known as sub or lower level options.

Use the **Esc** key to move backwards to display the previous menu level.

Use the **Menu** key to move to the top menu level heading.

Use the **Enter** key to select a displayed option that is selectable (i.e., the option is preceded by an underscore “_” or asterisk “*”). When an option is selected,

MENU MAPS SHOWING THE PATH THROUGH THE MENUS

The following maps illustrate the path you take to navigate through the menu headings and associated configuration options.

NOTE: The notations on the following menu maps represent the following moves or actions:

A vertical arrow illustrates a move made with the **Up** or **Down** arrow keys.

A horizontal arrow illustrates a move with the **Enter** key to a lower level heading.

An asterisk ‘*’ preceding te menu option indicates that this setting is the default.

Language, Printout Menu, Set Interface

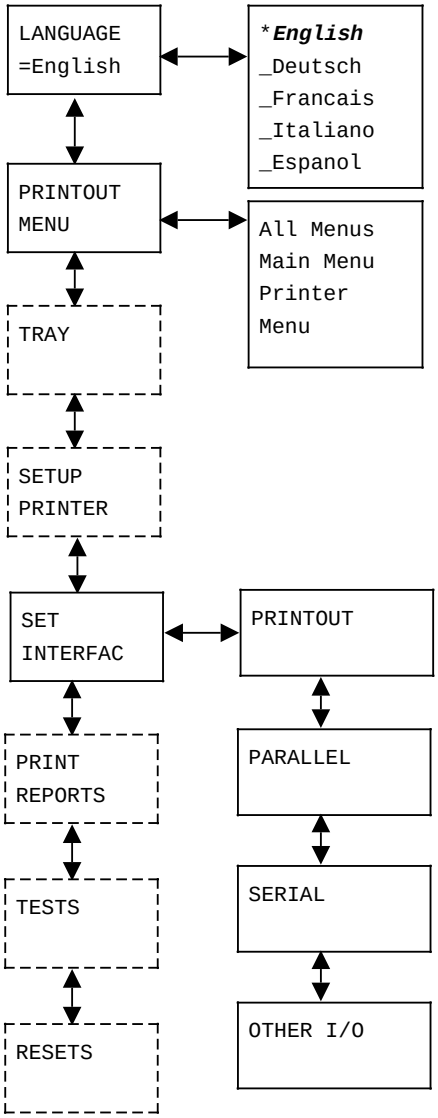

Tray Select, Printer Tray, Auto Swap

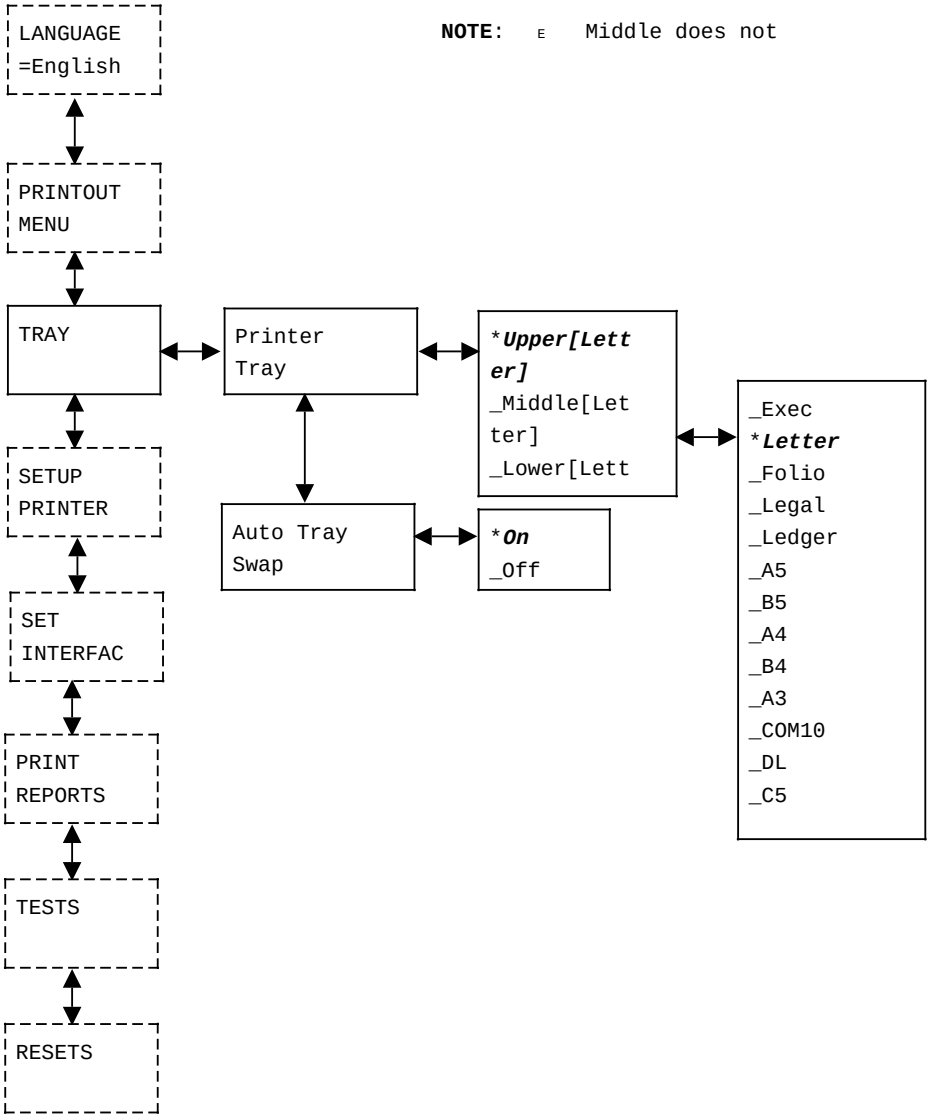

NOTE: E Middle does not

Setup Printer, PCL 5 Setup, PS Resolution, PET, Options

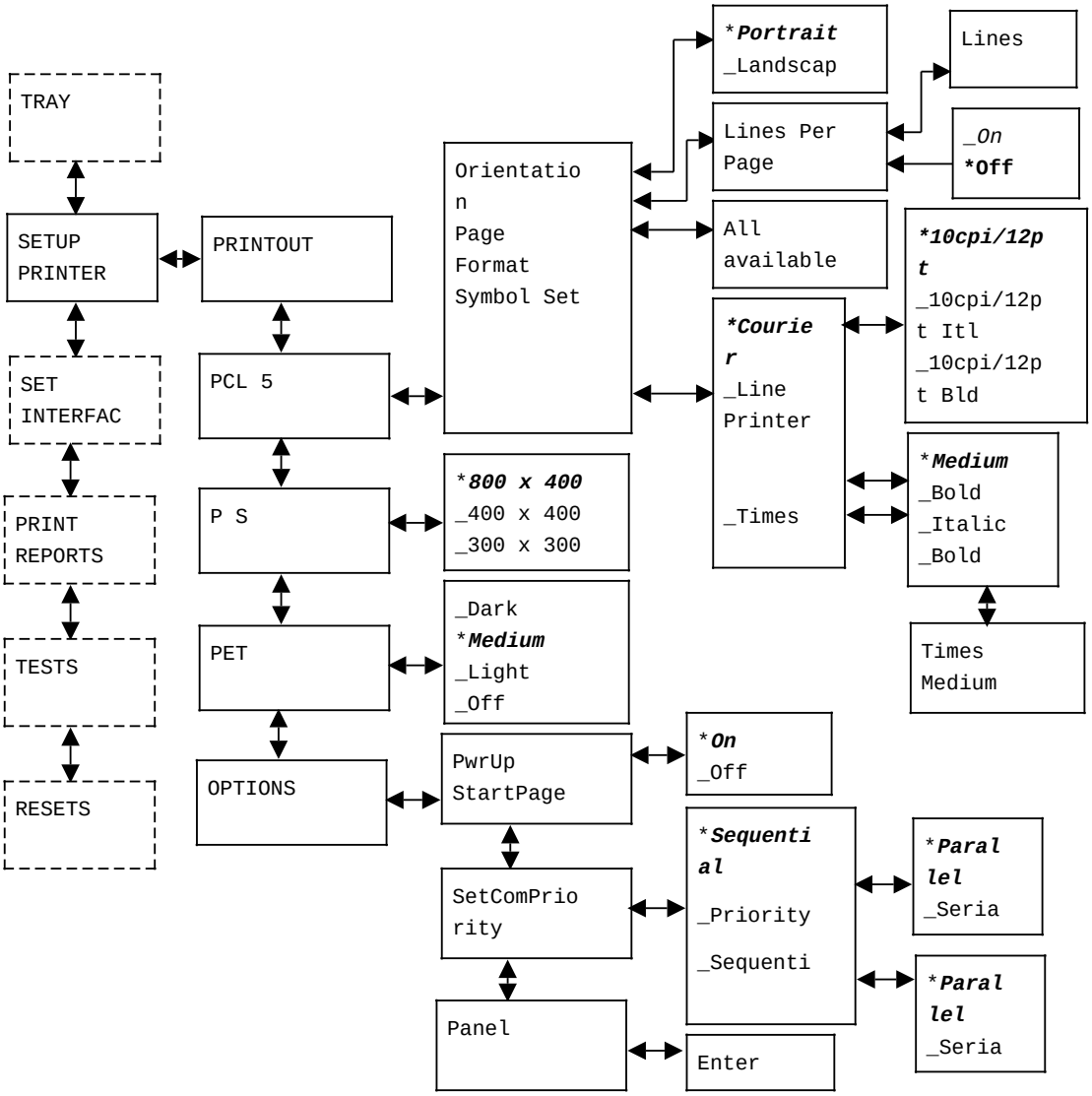

Parallel, Serial, Other I/O Interface

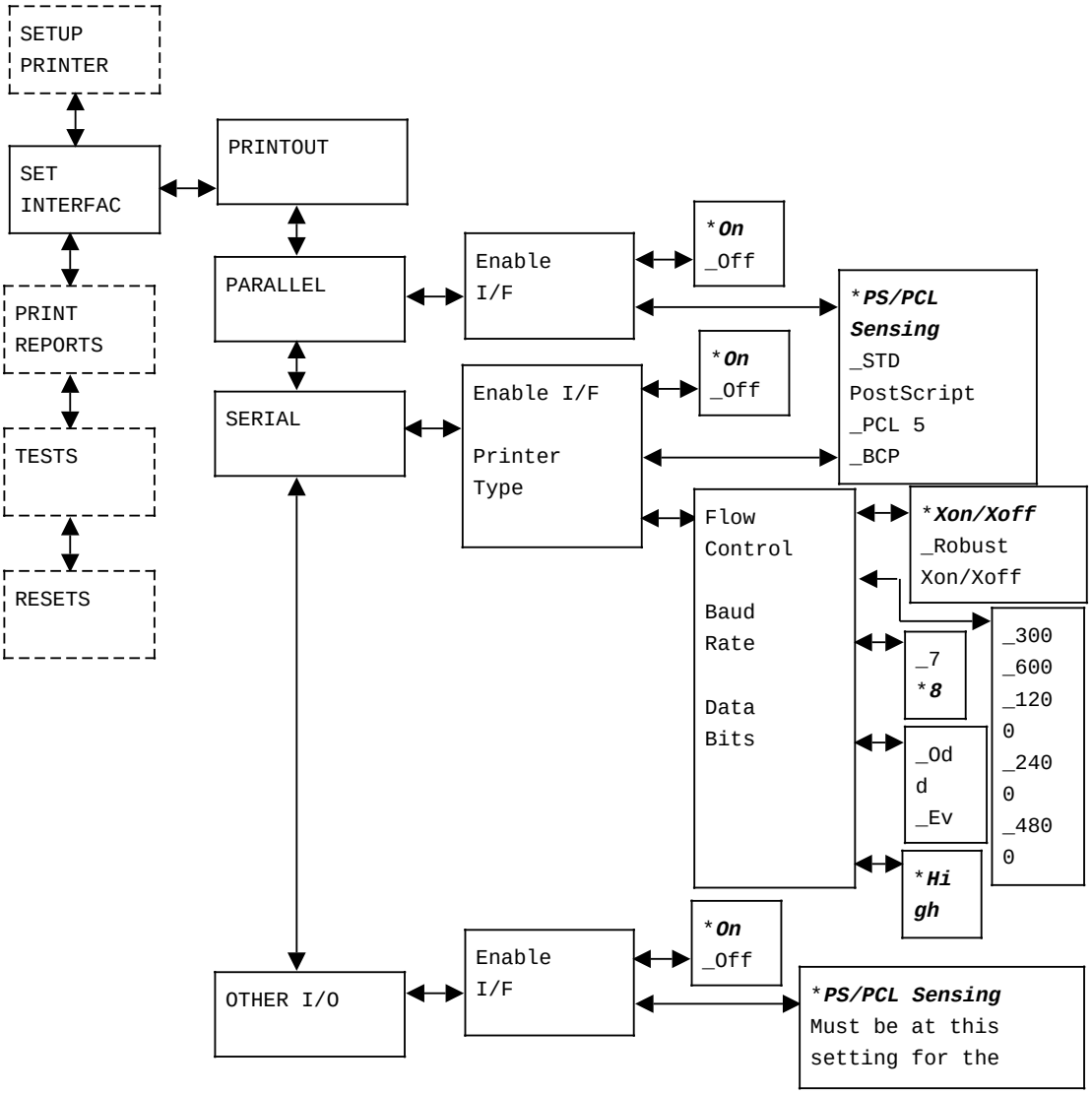

Print Reports, Tests, Resets

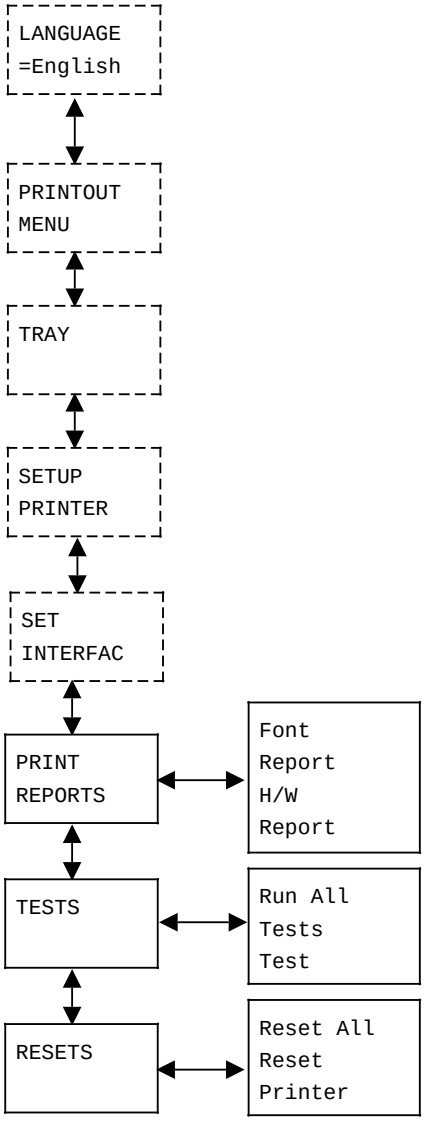

PRINTER CONFIGURATION EXAMPLES

The examples provided in this section illustrate the step-by-step procedures for changing the system configuration using the control panel.

NOTE: For configuration of the twinax/coax interfaces and IBM printer emulations, use the Xerox Configuration and Resource and Utility which is described in the Xerox Twinax Command Reference and the Xerox Coax Command Reference.

NOTE: The following examples assume the printer is currently set to factory default configurations. Pressing **Online** and **Help** while powering up the printer returns the printer to its factory defaults.

F Printer configuration examples:

A. Settings for the default paper tray and the automatic tray swap.

B. Turning off the Start Page

C. Setting the default font for PCL 5 mode.

D. Setting the communications port to priority Other I/O.

F Interface configuration examples :

A. Setting the Default Paper Tray and Automatic Tray Swap Setting

To change the paper tray default:

1. Press the **Menu** key to take the printer offline and display the Control Panel Main Menu. The display reads:

   LANGUAGE
   = English

2. Press the **Down** arrow key until the display reads TRAY SELECT.

3. Press the **Enter** key. The display reads:

   Printer Tray
   =Upper[Letter] (or A4 for non North American printers)

4. Press the **Enter** key. The display reads *Upper[Letter].

5. Press the **Down** arrow key until the display reads _Lower[Letter].

6. Press the **Enter** key to select the lower paper tray. *Selected* appears briefly in the second line of the display. The display then reads:

To change the Auto Tray Swap setting:

1. Press the **Down** arrow key until the display reads:

   Auto Tray Swap
   =On

2. Press the **Enter** key. The display reads *On.

3. Press the **Down** arrow key to display _Off.

4. Press the **Enter** key to disable the Auto Tray Swap function. *Selected* appears briefly in the second line of the display. The display then reads:

   Auto Tray Swap
   =Off

5. Press the **Online** key to exit the menu and return the printer ONLINE.

The configuration changes made and entered at

B. Turning Off the Start Page

To turn off the Start Page:

1. Press the **Menu** key to take the printer offline and display the Control Panel Main Menu. The display reads:

   LANGUAGE
   = English

2. Press the **Down** arrow key until the display reads SETUP PRINTER.

3. Press the **Enter** key. The display reads PRINTOUT MENU.

4. Press the **Down** arrow key to display OPTIONS.

5. Press the **Enter** key. The display reads:

   PwrUpStartPage
   =On

6. Press the **Enter** key. The display reads *On.

7. Press the **Down** arrow key to display _Off.

8. Press the **Enter** key to stop the Start Page from printing at power-up. *Selected* appears briefly in the second line of the message display. The display then reads:

C. Setting the Default Font for PCL 5 Mode

This example shows you how to change the default font from Times-Medium to Courier 12cpi/10pt for PCL 5 mode.

To change the default font for PCL 5 mode:

1. Press the **Menu** key to take the printer offline and display the Control Panel Main Menu. The display reads:

   LANGUAGE
   = English

2. Press the **Down** arrow key until the display reads SETUP PRINTER.

3. Press the **Enter** key. The display reads PRINTOUT MENU.

4. Press the **Down** arrow key to display PCL 5 SETUP.

5. Press the **Enter** key. The display reads:

   Orientation
   =Portrait

6. Press the **Down** arrow key until the display reads:

   Fonts
   =Times

7. Press the **Enter** key. The display reads:

   *Times

10. Press the **Down** arrow key until the display reads _12cpi/10pt.
11. Press the **Enter** key. *Selected* appears briefly in the second line of the message display. The display then reads:

    *Courier
    =12cpi/10pt

12. Press the **Online** key to exit the menu and return the printer ONLINE.

The default font is in place for the PCL 5 mode, now and each time the printer is switched

D. Setting the Communications Port to Priority Other I/O

To change the communications port scheme from Sequential to Priority Other I/O (twinax or coax):

1. Press the **Menu** key to take the printer offline and display the Control Panel Main Menu. The display reads:

   LANGUAGE
   = English

2. Press the **Down** arrow key until the display reads SETUP PRINTER.

3. Press the **Enter** key. The display reads PRINTOUT MENU.

4. Press the **Down** arrow key until the display reads OPTIONS.

5. Press the **Enter** key. The display reads:

   PwrUpStartPage
   =On

6. Press the **Down** arrow key. The display reads:

   SetComPriority
   =Sequential

9. Press the **Enter** key. The display then reads:

   *Parallel

10. Press the **Down** arrow key two times. The display reads:

    _Other I/O

11. Press the **Enter** key. *Selected* appears briefly in the second line of the message display. The display then reads:

    SetComPriority
    =Priority

12. Press the **Online** key to exit the menu and return the printer ONLINE.

E. Specifying PCL 5 Mode for the Serial Interface

This example shows you how to designate the PCL 5 mode for the serial interface.

To specify the PCL 5 mode for serial interface:

1. Press the **Menu** key to take the printer offline and display the Control Panel Main Menu. The display reads:

   LANGUAGE
   = English

2. Press the **Down** arrow key until the display reads SET INTERFACE.

3. Press the **Enter** key. The display reads PRINTOUT MENU.

4. Press the **Down** arrow key until the display reads SERIAL.

5. Press the **Enter** key. The display reads:

   Enable I/F
   = On

6. Press the **Down** arrow key to display:

   Printer Type
   =PS/PCL Sensing

7. Press the **Enter** key. The display reads *PS/PCL Sensing.

8. Press the **Down** arrow key to display _PCL 5.

10. Press the **Online** key to exit the menu and return the printer ONLINE.

The serial interface is set to only recognize the PCL 5 command language. This configuration

F. Setting the Serial Setup Configuration

This example shows you how to change the data bits and parity settings for the serial setup configuration.

1. Press the **Menu** key to take the printer offline and display the Control Panel Main Menu. The display reads:

   LANGUAGE
   = English

2. Press the **Down** arrow key until the display reads SET INTERFACE.

3. Press the **Enter** key. The display reads PRINTOUT MENU.

4. Press the **Down** arrow key until the display reads SERIAL

5. Press the **Enter** key. The display reads:

   Enable I/F
   = On

6. Press the **Down** arrow key to display Serial Setup.

7. Press the **Enter** key. The display reads:

   Flow Control
   = Xon/Xoff

11. Press the **Enter** key. *Selected* appears briefly in the second line of the message display. The display then reads:

    Data Bits
    = 7

12. Press the **Down** arrow key to display:

    Parity
    = None

13. Press the **Enter** key. The display reads *None.

14. Press the **Up** arrow key until the display reads _Odd.

15. Press the **Enter** key. *Selected* appears briefly in the second line of the display. The display then reads:

    Parity

CONFIGURING THE INTERFACE CARD

This chapter describes:

- Configuring the coax interface card for default page size and print language settings
- Configuring the twinax interface card for default printer language, page size, print language, printer emulation, and device address settings
- Configuring the twinax IPDS interface card for the default printer emulation setting
- Printing the Other I/O Log
- Dual printer lines connected to the interface card

The default settings described in this chapter are used whenever a print request does not set them.

For information on setting defaults through the Function Selection via Line (FSL) commands, refer to the *Xerox Twinax Command Reference* and *Xerox Coax Command Reference*.

SETTING THE COAX AND TWINAX DEFAULTS

Figure 3-1 illustrates the top view, and Figure 3-2 illustrates the side view of the coax interface card. Figure 3-3 illustrates the top view of the twinax interface card. Figure 3-4

ST1 sets the default paper size

ST2 sets the

Figure 3-1. Coax Interface Card (top view)

1 Test Button

2 CU LED (If light is not on, printer is not connected)

3 Parallel share

Figure 3-2. Coax Interface Card (Side View)

ST1 sets the default paper size

ST2 sets the default print language

SW1 sets

Figure 3-3. Twinax Interface Card (Top View)

1 Test Button

2 Sync LED

3 Parallel share port (reserved for Xerox use)

4 Device

Figure 3-4. Twinax Interface Card (Side View)

Page Size

The default page size is set with a 2-pin jumper (**ST1**). The jumper is turned OFF by placing the jumper shunt over only one pin, as shown in the illustration below. The jumper is turned ON by covering both pins. Turning the jumper OFF sets the page size default to U. S. (8.5x11). Turning the jumper ON sets the page size default to European A4 (8.27x11.69). Figures 3-1 (coax) and 3-3 (twinax) show the

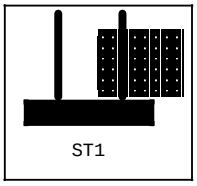

Print Language

The default print language is determined by the placement of a shunt over a 3-pin jumper (**ST2**). The illustration below shows the jumper configuration. The printer works properly only with the jumper in the standard configuration. The shunt should always be placed over the two pins closest to the edge of the interface card.

DO NOT move the jumper shunt. The jumper

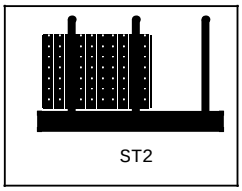

Printer Language (twinax only)

Figure 3-5 shows the printer language switch settings. The default language setting is configured by your Xerox service representative

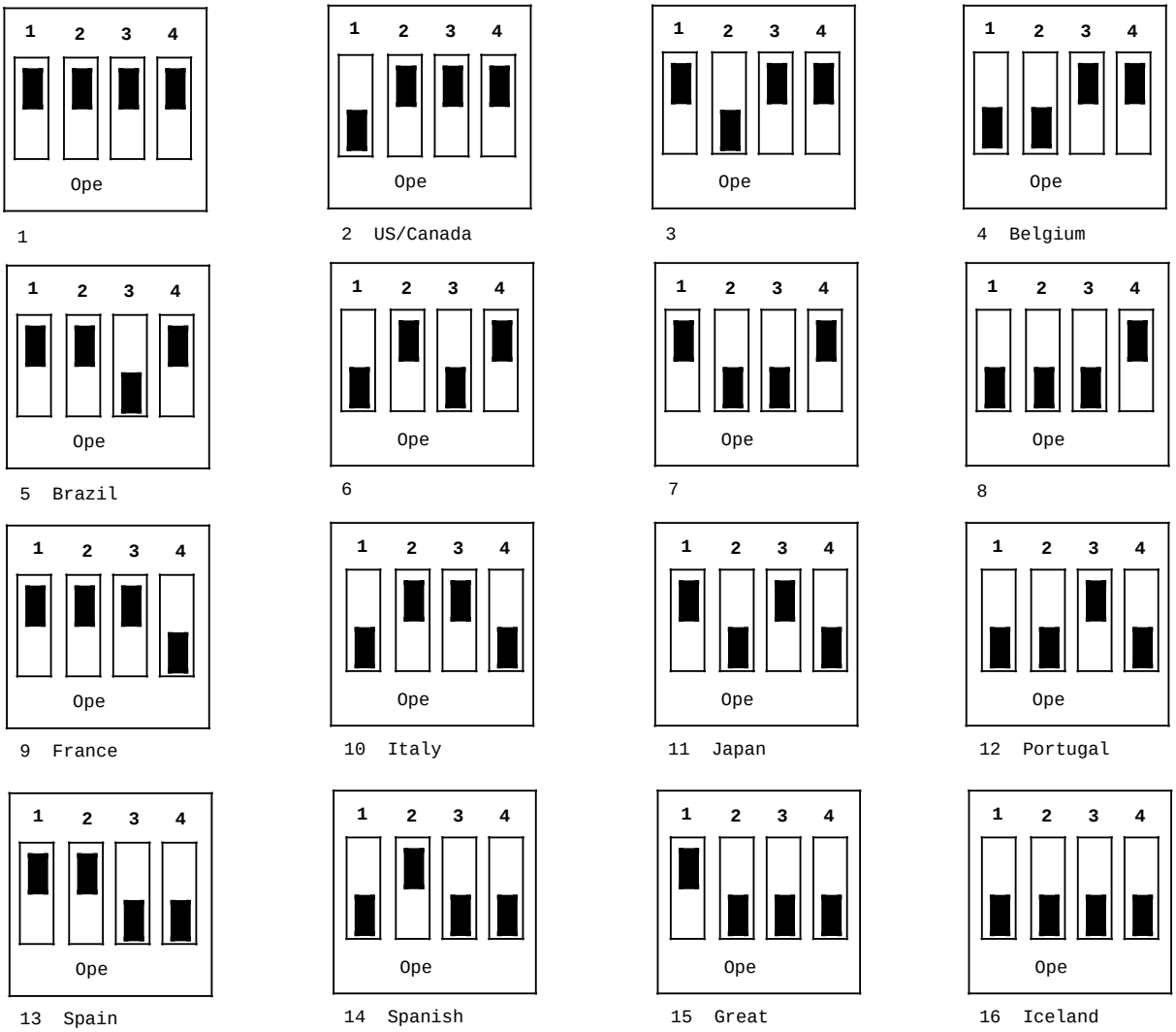

Figure 3-5. Printer Language Switch Settings

SETTING THE PRINTER EMULATION AND DEVICE ADDRESS

You may need to change the printer emulation or printer device address settings at a later date. Changing the printer emulation and device address does not require removing the twinax interface card from the printer. Procedures for changing the printer emulation or device address are included in this section. All other interface card configuration changes require the removal of the card from the printer and should be done only by your Xerox service representative.

NOTE: The coaxial default settings for the printer device address and printer emulation can only be set through the FSL Function. Refer to the *Xerox Coax Command Reference* for instructions and a complete listing of coax printers the 4219/MRP and 4215/MRP can emulate.

Printer (Model)	**Type**	**Speed**	**CPI**	**LPI**	**Character Sets**
3812/16 (in 5219	Laser (	12/24	10, 12, 15 proportion	4, 5.33, 6, 8,	User selectable
4234 (2,	Dot-band	410 lpm	10, 15	3, 4, 6,	Depends on band mounted: 198 characters
4245	Band	2000 lpm	10	6, 8	Depends on band mounted: 48-142
5219 (D01, D02)	Daisywheel	24-38 cps	10, 12, 15 proportion	4, 5.33, 6, 8,	Depends on daisy-wheel
5224 (1,	Dot-matrix	60-240 lpm	10, 15	3, 4, 6,	Various with 96 and 188
5225 (1,	Dot-matrix	90-400 lpm	10, 15	3, 4, 6,	Various with 96 and 188
5256 (1,	Dot-matrix	120 cps	10	6, 8	Various with 96, 128, and 188 characters
6262	Band	1400 lpm	10	3, 4, 6,	Depends on band mounted: 48-192

Table 3-1. Xerox printer twinax emulations

The address switch is used for setting both the emulation and the printer address. If you change the printer emulation, you must then reset the printer device address. Use the two part process described below to change the printer emulation in a twinax environment.

In the first part of the process you set the printer emulation. To have your printer emulate one of the printers (listed in Table 3-1), follow this procedure:

Step 1. Switch the printer off.

Step 2. Disconnect the twinaxial T-cable from the printer.

Address	**Emulation**
0	3812/5219/3816 (factory
1	5224 SCS printer
2	5225 SCS printer
3	5256 SCS printer
4	4234 SCS printer
5	3812/5219/3816
6	4245/6262 SCS printer

If, for example, you want to change the printer to emulate a 5226, turn the address switch to 3.

Step 4. Gently Press in the test button (identified in Figure 3-4), and keep the test button depressed through step 6.

Step 6. After the printer powers up, the green test light flashes two times. Wait ten seconds after the green light flashes and release the test button.

The Start Page (see Figure 1-26) prints (if enabled), followed by a page with the following single line item:

CURRENT EMULATION IS 5256

The printer emulation is now stored in nonvolatile memory.

Printer Address At this point the printer emulation is set, but the printer address is not. In the second part of the process you set

Step 9. Connect the twinaxial printer cable.

Step 10. Switch the printer on again.

The Start Page (see Figure 1-26) prints (if enabled), followed by the Twinax Configuration Report.

Step 11. Verify that the printer address has been set correctly by checking the Line Set Up field on the Twinax Configuration Report. For this

Setting the IPDS Printer Emulation

If you have the IPDS module installed, the printer emulation assignments change within the twinaxial environment.

To set the printer emulation for an IPDS twinax printer, follow the procedure in the “Setting

Address	Emulation
0	3812/5219/3816
1	5224 SCS printer
2	5225 SCS printer
3	5256 SCS printer
4	4234 SCS printer
5	IPDS printer (factory
6	4245/6262 SCS printer

Setting the Printer Device Address

To set the printer device address, follow the steps below:

Step 1. Switch the printer off.

Step 2. Disconnect all twinaxial cabling from the printer.

The device address switch set to device address switch is set to address 5 in the illustration

Step 4. Connect all twinaxial cables.

Step 5. Switch on the printer.

PRINTING THE OTHER I/O LOG

To print the Other I/O Log, press the Test button on the interface card (refer to Figure 3-6 for side views of the Twinax and Coax

1 Twinax Test **2** Coax Test

Figure 3-6. Twinax/Coax Interface Card Test

Refer to the “Other I/O Log” section of Chapter 4, “Printing,” for examples of the following Other I/O Log reports:

- Twinax Interface Configuration Report
- Coax Interface Configuration Report
- IPDS - Settings Printout
- IPDS - IPDS Resident Fonts
- IPDS - IPDS Resident Codepages
- IPDS - Resource List Printout

DUAL PRINTER LINES

The 4219/MRP and 4215/MRP offer dual printer emulation capabilities in which a twinax interface card can be configured to emulate an IPDS and an SCS printer simultaneously.

Sharing the printer between IPDS and SCS emulations requires the use of the FSL 37 command. Refer to the *IPDS Command Reference* for further information.

IPDS HARDWARE DIAGNOSTIC MESSAGES

Table 3-2
IPDS Hardware Diagnostic Messages

IPDS hardware diagnostics message	Result/Reason	Action
0x8020 : IPDS module	IPDS module has	Call your Xerox service representative.
0x8021 : IPDS module ROM checksum	IPDS module has	Call your Xerox service representative.
0x8022 : IPDS module DRAM error.	IPDS module has	Call your Xerox service representative.
0x8023 : IPDS module timer error.	IPDS module has	Call your Xerox service representative.
0x8024 : IPDS module Flash	An error occurred in the Flash PROM, so it is not possible to use the contents of the Flash. All Flash PROM settings revert to factory defaults, including fonts and codepages. If the power was switched OFF while	1. Power OFF the printer. 2. Power ON the printer. 3. Reset default settings, including

PRINTING

This chapter discusses printing preparations and procedures. The following information is presented:

- Image area
- Selecting fonts
- Sending a print job
- Printing on envelopes, transparencies and labels
- Printing Reports
  - Font Report
  - Hardware Status Report
  - Error Log
  - Other I/O Log

IMAGE AREA

There is an area of space on the outside edge of the paper that is unavailable for printing.

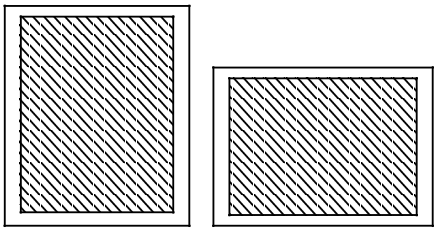

SELECTING FONTS

Fonts are selected through your application software, through printer commands to select a font, or for PCL 5 at the control panel. The font you select is used unless you change it.

Fonts are selected by the Xerox Configuration and Resource Utility for Twinax and Coax printing.

Default Font for the PCL 5 Mode

You may select a default font for the PCL 5 mode either through a PCL 5 command set, through your application software, or by accessing the PCL 5 SETUP option at the Printer Setup Menu. The default font you select at the menu is used unless you:

- Change your selection at the menu.
- Select a different font through your application software.
- Send a printer command to select a font with your document.

A factory default font has been established for the PCL 5 mode and is listed on the Printer Setup Menu for the PCL 5 SETUP.

SENDING A PRINT JOB

Before you begin to print, make sure that the interface cable or cables between the host

If the Xerox IPDS option is installed, then IPDS data also is supported by the printer.

NOTE: The Other I/O (twinax or coax) interface must always be set for “Emulation sensing” to function for processing IBM SCS or IPDS data.

To dedicate a communications port to receive a specific printer language, refer to Chapter 2, “Using the Control Panel.” For an example of how to do this, refer to “Printer Configuration Examples” in Chapter 2.

Send a job from your host computer to be printed. Refer to the manual provided with your application software or host operating system for specific instructions on printing.

LAST PAGE IS NOT EJECTED

If “Waiting...” still displays after the printer activity has stopped and no more pages are ejected, refer to the following.

When Using PCL 5 Command Set or IBM SCS or IPDS emulations

You must manually eject the remaining page of the document or wait until the printer times out. When the printer times out, the remaining page prints. To manually eject the page, follow these steps:

PRINTING FROM THE MANUAL FEED TRAY

The Manual Feed Tray is used for printing on special papers such as labels, envelopes, and transparencies.

To print on odd-sized or nonstandard weight (16 to 32 lb or 60 to 120 gsm) papers or special materials, such as labels or transparencies, you must use the Manual Feed Tray to manually insert one sheet at a time.

To use the Manual Feed Tray, it is necessary to either:

- Send a command from your host computer to the printer requesting manual feed, or
- Select Manual Feed at the control panel, by accessing the Control Panel Main Menu.

SELECTING THE MANUAL FEED TRAY

The Manual Feed Tray can be selected through your software application or by using the control panel. Refer to your software application documentation; or to use the control panel, follow these steps: (In the following example, Tray means Upper, Middle, or

Step 3. Press the **Enter** key. The display reads:

```
Printer Tray
=Tray[Paper Size]
```

Step 4. Press the **Enter** key. The display reads:

```
*Tray[Paper Size]
```

Step 5 Press the **Down** arrow key until the display reads:

```
_Manual Feed
=Letter(8.5x11)
```

Step 6. Press the **Enter** key. The display reads:

```
*Letter(8.5x11)
```

NOTE: If Letter(8.5x11) is *not* the paper size you are using with the Manual Feed Tray, skip steps 7 and 8. Continue with step 2 in the next section, “Selecting a Paper Size for Manual Feed.”

Step 7. Press the **Enter** key. “*Selected*” appears momentarily in the second line of the display, and then the display reads:

```
Printer Tray
=Manual Feed
```

Step 8. Press the **Online** key to place the printer online.

Table 4-1
Manual Feed Paper Sizes

Paper	Size
Letter	8.5 x 11 inches
Legal	8.5 x 14 inches
Exec	7.25 x 10.5
Folio	8.5 x 13 inches
Ledger	11 x 17 inches
A3	297 x 420 mm
A4	210 x 297 mm
A5	148 x 210 mm
B4	257 x 364 mm
B5	182 x 257 mm

Step 1. Follow steps 1 through 6 in the previous section, “Selecting Manual Feed at the Printer.” The display reads:

*Letter(8.5x11)

Step 2. Press the **Up** or **Down** arrow keys until the display reads the paper size or envelope name you wish to use for manual feed. The display reads:

_Paper Name (Paper Size)

Step 3. Press the **Enter** key. “*Selected*” appears

Step 4. Press the **Online** key to place the printer online.

Face-up Output Tray

When you use special materials, it is recommended that you use the Face-up Output Tray as the output tray. The paper path from the manual feed slot to the Face-up Output Tray is straighter and is less likely to jam on special materials, i.e. transparencies.

Refer to “Installing the Face-up Output Tray,” in Chapter 1, “Overview and Installation,” for instructions on how to install and use the Face-up Output Tray.

USING THE MANUAL FEED TRAY

When you send a job to the printer and manual feed has been selected as the paper source, the following message displays:

MANUAL[Paper Size]

NOTE: A paper jam can occur if paper is fed into the manual feed slot before this message appears. Paper jams and other errors are accompanied by a beeper sound.

Feeding Paper through the Manual Feed Slot

Follow these steps when feeding a single sheet of paper through the manual feed slot:

Step 4. Place a single sheet of paper, label stock, transparency, etc., on the tray, between the feed guides. The right and left feed guides should be touching the edges of the paper.

NOTE: The paper should be inserted *short edge first* to ensure proper portrait or landscape orientation.

Step 5. Insert the sheet of paper into the manual feed slot until it meets resistance. Keep the paper straight (aligned and flush with the right and

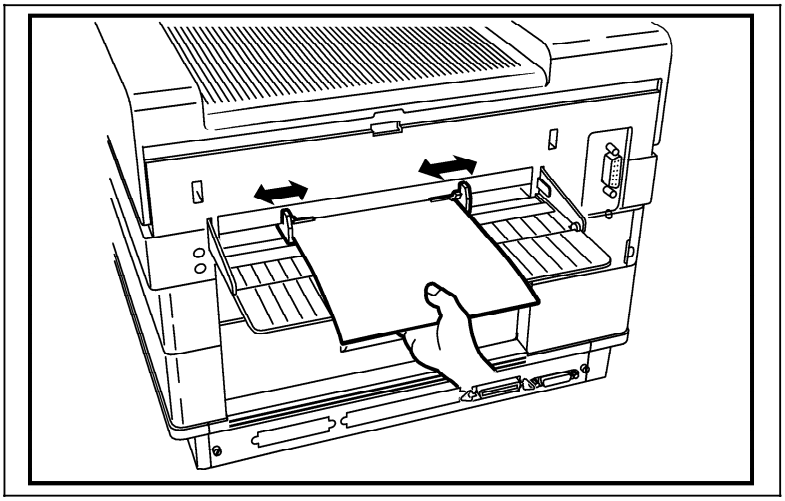

Figure 4-1. Feeding Paper through the Manual Feed Slot

If your manual feed print job is not completed, continue at step 6.

Feeding Subsequent Sheets into the Manual Feed

Step 6. Watch for the MANUAL[Paper Size] message. The message indicates that the printer is ready to accept the next sheet of paper.

NOTE: The previous sheet should have fallen

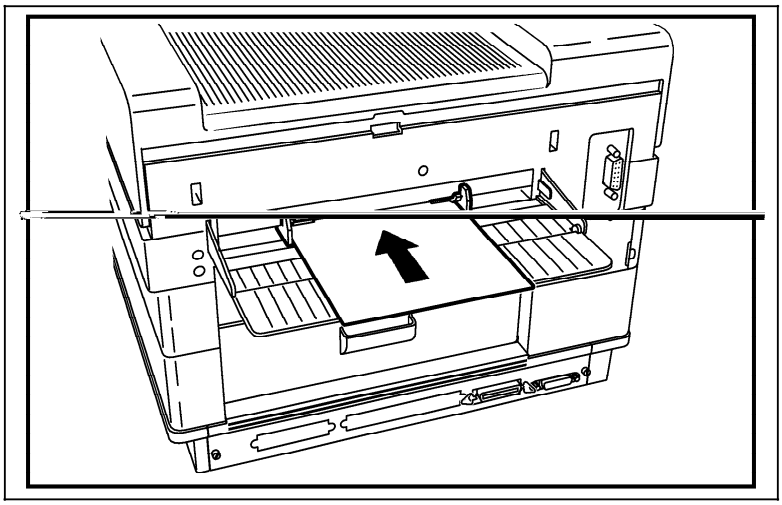

Figure 4-2. Feeding Subsequent Sheets of Paper through the Manual Feed Slot

Step 8. Maintain pressure on the sheet until it moves

When the Manual Print Job is Finished

Step 1. Return the manual feed tray to its original position, as shown in Figure 4-3.

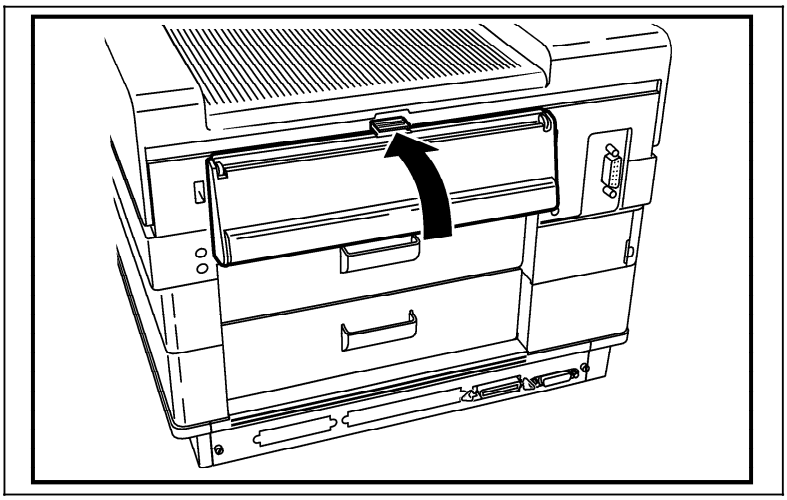

Figure 4-3. Closing the Manual Feed Tray

Step 2. If you used the Control Panel Main Menu to select manual feed and paper size, you need to use the control panel to return the current tray and paper size settings to their original settings. Press the **Menu** key. The printer is automatically placed offline and in menu mode. The display reads:

```
LANGUAGE
=English
```

Step 3. Press the **Down** arrow key until the display reads:

```
TRAY SELECT
```

Step 4. Press the **Enter** key. The display reads:

```
Printer Tray
=Manual Feed
```

Step 5. Press the **Enter** key. The display reads:

```
*Manual Feed
=Paper Name (Paper Size)
```

Step 6. Press the **Down** or **Up** arrow key until the original tray and paper size displays:

```
_Tray[Paper Name]
```

Step 7. Press the **Enter** key. “*Selected*” displays momentarily. Then the display reads:

```
Printer Tray
```

Preventing Manual Feed Problems

It is important to carefully follow the manual feeding procedures to reduce the risk of paper handling problems, such as paper jams and skewed images (print appears on the sheet out of alignment, slanted at an angle).

Paper jams are usually the result of early feeds. The sheet is fed before the preceding sheet has cleared the paper path by dropping onto the output tray.

NOTE: If paper jams do occur, refer to the “Clearing a Paper Jam and Resuming the Job,” section in Chapter 5, “Care and Maintenance,” for the correct way to clear the jammed paper.

A skewed image is usually the result of:

F The sheet not being flush against both the

PRINTING ON ENVELOPES

Envelopes are fed one at a time through the manual feed slot.

Addresses are formatted to print on standard sized envelopes. You can select one of the standard envelopes listed in Table 4-2 using the TRAY SELECT menu item. To assure optimum print quality, refer to “Recommended Image Area for Envelopes,” later in this chapter.

Table 4-2
Envelope Size Requests

Envelope Name	Envelope Size
Business (Com	4.125 by 9.5 inches
International DL	110 by 220 millimeters
International C5	162 by 229 millimeters

Selecting Manual Feed and Envelope Size at the Control Panel

Single envelopes are printed using the Manual Feed Tray. Follow these procedures to select the Manual Feed Tray: (In the following example, Tray means Upper, Middle, or Lower.)

Step 1. Press the **Menu** key. The printer is automatically placed offline and in menu mode. The display reads:

Step 2. Press the **Down** arrow key until the display reads:

TRAY SELECT

Step 3. Press the **Enter** key. The display reads:

Printer Tray
=Tray[Paper Size]

Step 4. Press the **Enter** key. The display reads:

*Tray[Paper Size]

Step 5. Press the **Down** arrow key until the display reads:

Manual Feed
=Letter[8.5x11]

Step 6. Press the **Enter** key. The display reads:

*Letter(8.5x11)

Follow these procedures to select the envelope size:

Step 7. Press the **Down** arrow key until the display reads the name of the envelope you wish to use for manual feed. The display reads:

_Envelope Name

Step 8. Press the **Enter** key. “*Selected*” appears momentarily in the second line of the display,

Using the Manual Feed Tray for Envelopes

Standard envelopes are printed one at a time, using the manual feed tray.

When you send an address to the printer and manual feed has been selected as the paper source, the beeper sounds and the following message displays:

MANUAL[Paper Size]

NOTE: A paper jam can occur if an envelope is fed into the manual feed slot before this message appears. Paper jams and other errors are accompanied by a beeper sound.

Feeding a Single Envelope through the Manual Feed Slot Follow these instructions when feeding a single envelope through the manual feed slot:

NOTE: When you use the Manual Feed Tray, it is recommended that you use the Face-up Output Tray as the output tray. Refer to the section, “Installing the Face-up Output Tray,” in Chapter 1.

Step 1. Push down on the manual feed tray tab to open the tray.

Step 2. Move the right and left adjustable feed guides

NOTE: Envelopes are fed right side up (flap side down). If the envelope flap is on the long edge of the envelope, place the closed fold against the right feed guide. If the envelope flap is on the short edge of the

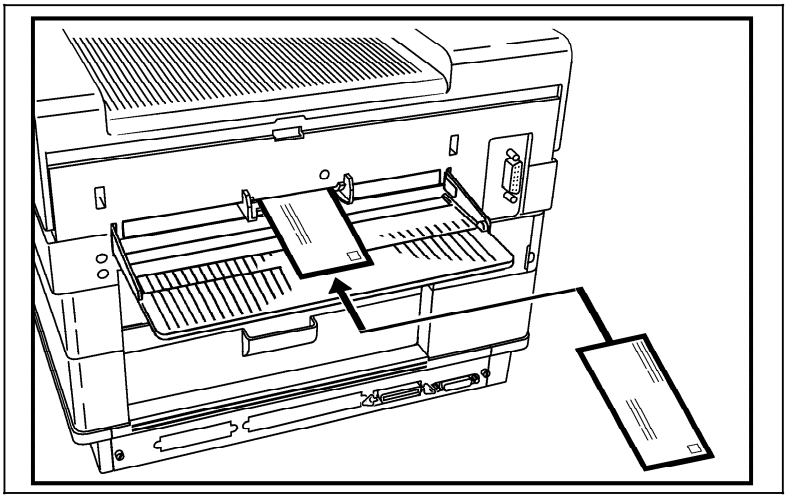

Figure 4-4. Envelope Orientation Diagram

Step 5. Insert the envelope into the manual feed slot until it meets resistance. See Figure 4-5. Keep the envelope straight (aligned and flush with the right and left feed guides) to avoid a skewed print. *Maintain pressure against the*

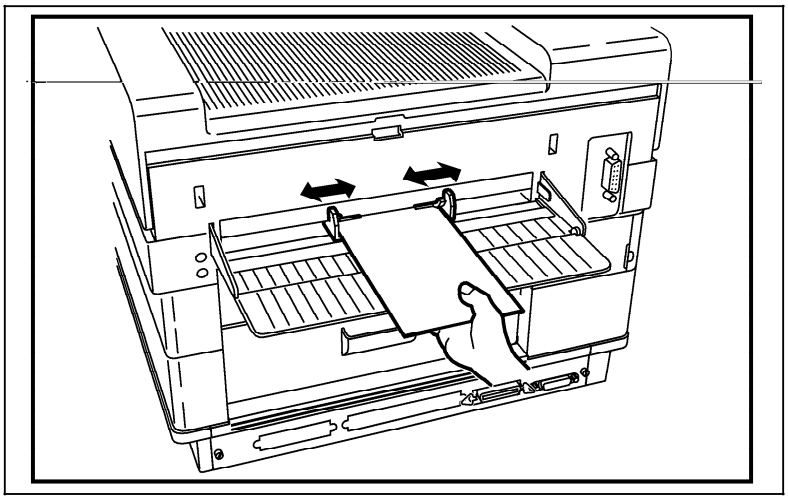

Figure 4-5. Feeding the Envelope into the

If your manual feed print job is not completed, continue at step 6.

Feeding Subsequent Envelopes through the Manual Feed Slot:

Step 6. Watch for the MANUAL[Paper Size] message. The message indicates that the printer is ready to accept the next envelope.

NOTE: The previous envelope should have fallen into the output tray.

Step 7. Align and insert the next envelope properly.

Step 8. Maintain pressure on the envelope until it moves and then release it.

Repeat steps 6 through 8 until you complete the manual feed print job.

Preventing Manual Feed Problems

It is important to follow carefully the manual feeding procedures above to reduce the risk of paper handling problems, such as paper jams and skewed images (print appears on the envelope out of alignment, slanted at an angle).

Paper jams are usually the result of the envelope being fed before the preceding envelope has cleared the paper path by dropping onto the output tray.

When the Envelope Print Job is Finished

Refer to the section, “When the Manual Print Job Is Finished,” earlier in this chapter for the steps to reset the manual feed and envelope size settings back to their original settings.

RECOMMENDED IMAGE AREA FOR ENVELOPES

The varying number of material thicknesses that are encountered in different areas of an envelope has a significant impact on print quality. Acceptable print quality can only be assured when printing in those areas where there are only two thicknesses of material. In Figure 4-6, the upper diagram shows the varying material thicknesses that are present on a commercial #10 envelope.

The lower diagram in Figure 4-6 defines the recommended image area. See the lower diagram for the following explanations:

- **Recommended image area**: The cross-hatched area should be used for printing the address of the recipient. Optimum image quality is achieved in this area.
- **Shaded areas**: These areas represent the area to be used for the address. This recommendation is based on the requirements of high-speed optical character recognition

Figure 4-6. Optimum imaging area - #10

PRINTING THE REPORTS

You can print several reports from the control panel. This section briefly describes the information contained in each report. The reports you can print include:

- Font Report
- Hardware Status Report
- Error Log
- Other I/O Log

FONT REPORT

The Font Report gives a listing, by font name of all resident and downloaded PostScript fonts (see Figure 4-7) and PCL 5 resident fonts (see

```
<                                   cut top 2"                          cut 1">

                                                                  DIIIIIIIIHHHHHHHHIIIIIIIIIIIII
```

Figure 4-7. PostScript Font Report

Continued

Figure 4-7. PostScript Font Report

```
<                                   cut top 2"                          cut 1">

                                                                  DIIIIIIIIHHHHHHHHIIIIIIIIIIIII
```

Figure 4-8. PCL Font Report

Continued

Figure 4-8. PCL Font Report

Continued

```
<                                   cut top 2"                          cut 1">

                                                                  DIIIIIIIIHHHHHHHHIIIIIIIIIIIII
```

Figure 4-8. PCL Font Report

Continued

Figure 4-8. PCL Font Report

Continued

```
<                                   cut top 2"                              cut 1">

                                                                  DIIIIIIIIHHHHHHHHIIIIIIIIIIIII
```

Figure 4-8. PCL Font Report

Continued

Figure 4-8. PCL Font Report

Continued

```
<                                   cut top 2"                              cut 1">

                                                                  DIIIIIIIIHHHHHHHHIIIIIIIIIIIII
```

Figure 4-8. PCL Font Report

Continued

Figure 4-8. PCL Font Report

Continued

```
<                                   cut top 2"                          cut 1">

                                                                  DIIIIIIIIHHHHHHHHIIIIIIIIIIIII
```

Figure 4-8. PCL Font Report

Continued

Figure 4-8. PCL Font Report

Continued

Figure 4-8. PCL Font Report

Printing the Font Report

Follow these steps to print the Font Report:

Step 1. Press the Menu key. The printer is automatically placed offline and in menu mode. The display reads:

```
LANGUAGE
=English
```

Step 2. Press the **Down** arrow key until the display reads:

```
PRINT REPORTS
```

Step 3. Press th**e Enter** key. The display reads:

```
Font Report
```

Step 4. Press the **Enter** key. “*Selected*” displays momentarily and the report prints automatically. The display reads:

```
Font Report
Printing...
```

NOTE: If your printer is equipped with the fixed disk drive option, it is possible that

Reading the Font Report

The Font Report lists all of the resident and downloaded PostScript fonts and all the resident PCL fonts, by font family. A font is a specific design of characters and symbols. For example, Univers is one font family and Helvetica is another. Univers Medium is a font within a font family. Font families usually contain a progression of design weights with corresponding italics, condensed, expanded and ornamental styles. A family can have as few as two weights. Two kinds of fonts can be used within the printer:

- Scalable fonts
- Bit-mapped fonts (PCL 5, SCS, and IPDS modes)

Scalable Fonts Scalable fonts are available in the PostScript page description language and PCL 5 mode. Scalable fonts are created within the printer on a character-by-character basis ensuring font quality. Fonts can be scaled in limitless sizes in PostScript page description

Font Characteristics

Fonts are made up of the following seven characteristics:

Symbol Set A symbol set is a unique subgrouping of all the available characters in a font. For example, Roman-8 and IBM-PC, ECMA-94, ISO 25 are the symbol sets available with the PCL 5 mode. Each symbol set is designed with a specific application in mind. Refer to Appendix H for the symbol set tables.

Spacing All fonts are designed with either fixed or proportional spacing. If the font spacing is set for fixed, all character cells are the same width regardless of the size of the character being printed. If the font spacing is set for proportional, character cell width depends on the character size. For example, a “W” is a wider character than an “I.” If spacing is fixed, both the characters (W and I) would be given the same sized character cell and equal space on the printed line. If spacing is proportional, the wider character (W) is contained in a wider character cell and given more space on the printed line than the narrower character (I).

Pitch Pitch refers to the number of characters that can be placed in a horizontal inch of text. All fixed pitch fonts use a specific pitch size. For example, a font with a pitch setting of 10 prints 10 characters for every

Resident Fonts (Typefaces)

Standard fonts available on the printer are listed under the ROM RESIDENT FONTS heading of the Font Report.

PostScript Standard Scalable Fonts The printer offers 35 PostScript standard scalable fonts. PostScript scalable fonts can be selected through your software application. The Font Report lists the following families of scalable fonts that are resident on the printer and available through the PostScript page description language:

- AvantGarde-book, AvantGarde-bookOblique, AvantGardeDemi, AvantGardeDemiOblique
- BookmanDemi, BookmanDemi-Italic, Bookman-Light, Bookman-LightItalic
- Courier, Courier-Bold, Courier-Oblique, Courier-BoldOblique
- Helvetica, Helvetica-Bold, Helvetica-Oblique, Helvetica-BoldOblique
- Helvetica-Narrow, Helvetica-Narrow-Bold, Helvetica-Narrow-Oblique, Helvetica-Narrow-BoldOblique

PCL 5 Mode Standard Scalable Fonts The printer offers 8 PCL 5 scalable fonts that are selected through PCL 5 command set or through the PCL 5 SETUP option at the Setup Printer Menu. The Font Report lists the following families of scalable fonts that are resident on the printer and available through the PCL 5 command set:

- Times-Medium, Times-Bold, Times-Italic, Times-BoldItalic
- Univers-Medium, Univers-Italic, Univers-Bold, Univers-Bold-Italic

PCL 5 Mode Standard Bit-mapped Fonts The printer offers 7 PCL 5 bit-mapped fonts that are selected through the PCL 5 command set or through the PCL 5 SETUP option at the Control Panel Main Menu. The Font Report lists the following families of bit-mapped fonts that are resident on the printer and available through the PCL 5 command set:

- Courier 10 pitch 12 point, Courier 10 pitch 12 point Italic, Courier 10 pitch 12 point Bold
- Courier 12 pitch 10 point, Courier 12 pitch 10 point Italic, Courier 12 pitch 10 point Bold
- LinePrinter 16.66 pitch 8.5 point.

Bit-mapped Fonts Versus Scalable Fonts Because

Downloaded Fonts

Downloaded fonts are fonts that are stored on the host and can be copied to the printer from your host computer. These fonts are not permanent, however; when you switch the printer off, you must download the fonts again because the memory used to store them is erased.

Load the fonts into the printer by following the instructions for downloading included with the font diskette. After downloading fonts, print a Font Report. Any PostScript fonts that have been downloaded to the printer from your host computer are listed by their font name in the RAM Resident column, and if installed, the Programmable Font Module and Fixed Disk Drive columns.

If you have installed the optional Fixed Disk Drive or the Programmable Font Module in your printer, you can use this storage to permanently store PostScript downloaded fonts. You must use the PostScript page description language to download fonts to nonvolatile memory.

IBM 3816 Equivalent Fonts

The Xerox Configuration and Resource Utility

AS400/IBM3816 Fonts Your twinax or coax printer provides font support for most of the printers it emulates. Support is provided for three categories of fonts:

- Fixed pitch fonts—Your printer supports fixed pitch fonts matching the fixed pitch capabilities of all the IBM printers emulated.
- Proportionally space mode (PSM) fonts—Your printer provides support for proportionally-spaced fonts using the same proportionally-spaced width values as those used by IBM, thus ensuring a perfect match with IBM proportionally-spaced fonts even when justification is in use.
- Typographic fonts—As the characters in typographic fonts have variable widths, justification, underscoring, and overstriking may not appear as intended.

The HP PCL downloadable, 3816 compatible fonts (a total of 55) files are in two orientations (portrait and landscape). The font sets are delivered as follows:

- Twinax configuration: (3.5"/5.25" PC-DOS high-density diskettes). Included with diskettes is the installation process.
- Coax configuration: (9 track tape). The tapes also include the installation procedure for the Configuration and Resource Utility (MVS/VM).

F Serif-text.10, Serif-text.italic.10, Serif-text.12, Serif-text.italic.12, Serif-text.bold.12, Serif-text.15

F Orator.10, Orator.bold.10

F Boldface.PSM, Boldface.italic.PSM, Essay.PSM, Essay.bold.PSM, Essay.light.PSM, Essay.italic.PSM, Document.PSM

F LetterGothic.12, LetterGothic.bold.12, Roman.10

F Sonoran-serif 8pt, Sonoran-serif 10pt, Sonoran-serif 12pt, Sonoran-serif.bold 10pt, Sonoran-serif.bold 16pt, Sonoran-serif.bold

G **CAUTION:** If you are printing on a 4215/MRP or 4219/MRP with the standard 8-megabytes of RAM, not all of the 55 3816 Replicant Fonts can be loaded. Doing so causes the printer to hang when printing the Font Report. A solution to this is to selectively load only those fonts that are used. Several resource lists are provided with the Twinax Utility to load a variable set of fonts. For example,

---

Detailed information on font downloading and font selection is found in the “Fonts support and selection” chapter in either the *Xerox Coax Command Reference* or the *Xerox Twinax Command Reference*.

Storage Information

HARDWARE STATUS REPORT

The Hardware Status Report provides information on the status of the printer, and the network and the fixed disk drive, if these options are installed.

You should print this report any time you upgrade the memory of the printer or add an

Figure 4-9. Hardware Status Report

Printing the Hardware Status Report

Follow these steps to print the Hardware Status Report:

Step 1. Press the **Menu** key. The printer is automatically placed offline and in menu mode. The display reads:

LANGUAGE
=English

Step 2. Press the **Down** arrow key until the display reads:

PRINT REPORTS

Step 3. Press the **Enter** key. The display reads:

Font Report

Step 4. Press the **Down** arrow key. The display reads:

H/W Report

Step 5. Press the **Enter** key. “*Selected*” displays momentarily and the report prints

ERROR LOG

The Error Log gives you a listing of the latest errors that have occurred.

Figure 4-10. Error Log

Printing the Error Log

Follow these steps to print the Error Log:

Step 1. Press the **Menu** key. The printer is automatically placed offline and in menu mode. The display reads:

LANGUAGE
=English

Step 2. Press the **Down** arrow key until the display reads:

PRINT REPORTS

Step 3. Press the **Enter** key. The display reads:

Font Report

Step 4. Press the **Down** arrow key until the display reads:

Error Log

Step 5. Press the **Enter** key. “*Selected*” displays momentarily and the report prints

Reading the Error Log

The Error Log header contains the following information:

- Report title--ERROR LOG
- Number of pages printed to date from the printer

This report provides the following information for each error condition recorded:

- **ERROR NUMBER**--The code number associated with the printer error.
- **DESCRIPTION**--A one line description of the error.

OTHER I/O LOG

Depending on the Interface card installed in your printer, printing the Other I/O Log generates one of the following interface configuration reports:

- Twinax Interface Configuration Report, shown in Figure 4-11
- Coax Interface Configuration Report, shown in Figure 4-12.

When an IPDS module is installed, the following four reports are automatically generated in conjunction with the Other I/O Log.

- IPDS - Settings printout, shown in Figure 4-13
- IPDS - IPDS Resident Fonts Report, shown in Figure 4-14
- IPDS - IPDS Resident Codepages Report, shown in Figure 4-15
- IPDS Resource List Printout, shown in Figure 4-16

Figure 4-11. Twinax Interface Configuration

```
<                                   cut top 2"                          cut 1">
```

DIIIIIIIIHHHHHHHHIIIIIIIIIIIII

Figure 4-12. Coax Interface Configuration

Figure 4-14. IPDS -IPDS Resident Fonts

Figure 4-15. IPDS - IPDS Resident Codepages

DIIIIIIIIHHHHHHHHIIIIIIIIIIIII

Figure 4-16. IPDS Resource List Printout *Continued*

Figure 4-16. IPDS Resource List Printout *Continued*

Figure 4-16. IPDS Resource List Printout

Printing the Other I/O Log

Follow these steps to print the Other I/O Log:

Step 1. Press the **Menu** key. The printer is automatically placed offline and in menu mode. The display reads:

```
LANGUAGE
=English
```

Step 2. Press the **Down** arrow key until the display reads:

```
PRINT REPORTS
```

Step 3. Press the **Enter** key. The display reads:

```
Font Report
```

Step 4. Press the **Down** arrow key until the display reads:

```
Other I/O  Log
```

Step 5. Press the **Enter** key. “*Selected*” displays momentarily and the report prints

The Xerox Twinax and Coax Interface Configuration Reports

The Twinax and Coax Interface Configuration Reports provide information on how the printer is configured to operate within a twinaxial or coaxial environment.

The functions listed on the reports refer to the settings of the FSL (Function Select via Line) options that are used to control the specific features of the twinax and coax emulations. The use of FSL commands allows you to select options and features on your 4219/MRP and 4215/MRP that are not available on the printers that are emulated.

The use of the FSL commands is documented in the *Xerox Twinax Command Reference* and the *Xerox Coax Command Reference*.

The Firmware version information printed at the top of the configuration report is useful information if you need to report a problem to Xerox

The Xerox IPDS - Settings Printout

The IPDS - Settings Printout contains the Firmware Version #, the amount of installed memory, and whether the installed interface is twinax or coax.

The **IPDS Setup** section provides the following information on how the printer is configured to

- Default Font: The FGID and Font Width are indicated for the selected default font. The IPDS Resident Fonts list printed with the IPDS - Settings Printout gives samples of the fonts.
- Report Margins to System: Can be set to Yes or No. If set to Yes, the margins for the paper sizes in the active trays are reported to the system. If set to No, the margins for the paper size of the emulated printer are reported. The default setting is No. Report Margins to System must be set to Yes if the VPA check is set to Margins.
- VPA Check: Defines which margins whould be used to determine if a VPA exception condition exists which has to be reported to the system. VPA checking is done by comparing the system’s logical page and the printable area defined for the printer emulation selected. Choices for VPA Check are Margins, Physical Page, IPDS Logical Page, and No VPA. If set to Margins, VPA checking is done by comparing the system’s logical page with the printable area defined for the printer selected. The default setting is Physical Page.
- IM Smoothing: Can be set to Yes or No. If set to Yes the IM (image) smoothing function will make fine adjustments to IM scaling. The default is Yes.
- Add margins: Can be set to Yes or No. If set to No, indicates there is no offset out

printer itself. The default is 1024 K-bytes. The default memory size should be sufficient in normal printing situations. If characters are missing in your printed output, the memory size should be increased.

- Resource Time Out: Amount of time the printer can be idle before the settings on this printout are no longer automatically assumed to be valid.
- Language Support: The output language of the printer. Set by the Xerox service representative at installation.
- Offset Stacker: Yes or No. Set by you, indicates whether the offset stacker is being used.

A table at the bottom of the printout indicates trays available, paper sizes in each tray, dimensions of printable area and logical page.

The Xerox IPDS - IPDS Resident Fonts

The report contains the Firmware Version #, and a listing of the IPDS resident fonts which includes:

- FGID: The hexadecimal (with decimal equivalents in parentheses) values for each font are indicated in the first two columns.
- Width: The value in this column indicates the size of the font in thousandths of an

The Xerox IPDS - IPDS Resident Codepages

The report contains the Firmware Version #, the number of resident codepages, and a listing of the codepages which includes:

- CPGID: The hexadecimal (with decimal equivalents in parentheses) values for each codepage are indicated in the first two columns.
- Group: A single letter identifies the group the codepage belongs to.
- Name: This column lists the name of the codepage’s group.

The IPDS Resource List Printout

The report contains the Firmware Version #, and provides a master list of all the resources available on the printer.

The **Storage Devices** section reports the following:

- The size and available Fixed Disk Drive space

CARE AND MAINTENANCE

This chapter provides the information you need to care for and maintain your printer to ensure optimum performance of the equipment and print quality.

CLEARING A PAPER JAM AND RESUMING THE JOB

It is occasionally necessary to clear a paper jam when printing. Paper jams occur for a variety of reasons.

The printer provides error codes and the corresponding messages for paper jams. Locations of paper jams and how to clear them to resume your printing job are discussed below.

PAPER JAM ERROR CODES

When a paper jam occurs, the beeper sounds five times at one second intervals and the printer stops printing. Table 5-1 lists the paper jam

Table 5-1
Paper Jam Error Messages

Location Reference	Control Panel Error Messages	Broadcast Message
E1	PAPER JAM>REAR	Error: Paper Jam at Tray Rear
E2	PAPER JAM>FUSER	Error: Paper Jam at Fuser
E3	PAPER JAM>EXIT	Error: Paper Jam at Exit Rollers

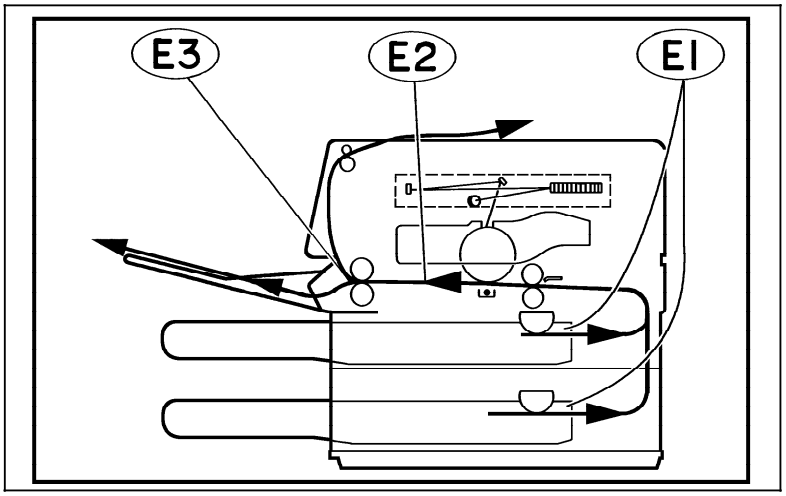

Figure 5-1. Paper Jam Locations

Paper Jam>Rear

This message can occur as a result of paper jamming while leaving the paper tray or manual feed tray, which is being used as the current feed tray, or immediately after leaving the paper tray or manual feed tray.

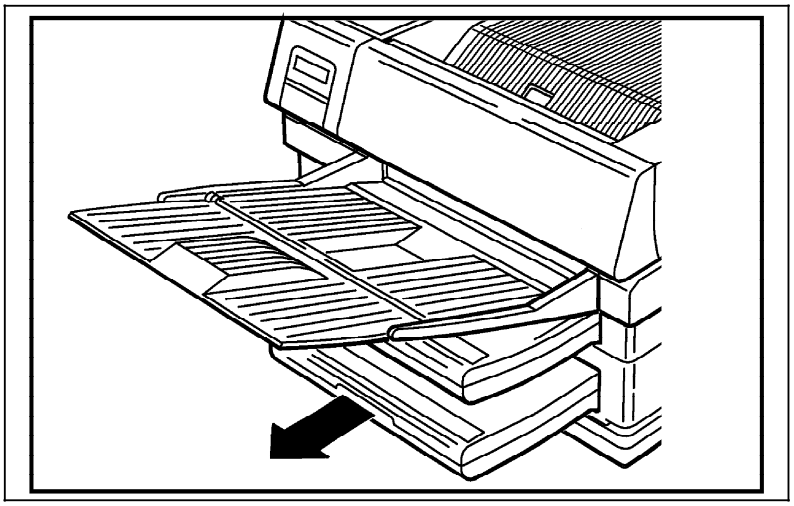

Figure 5-2. Removing the Paper Tray

Step 2. Ensure that the paper is seated correctly in the tray under the corner tabs and below the

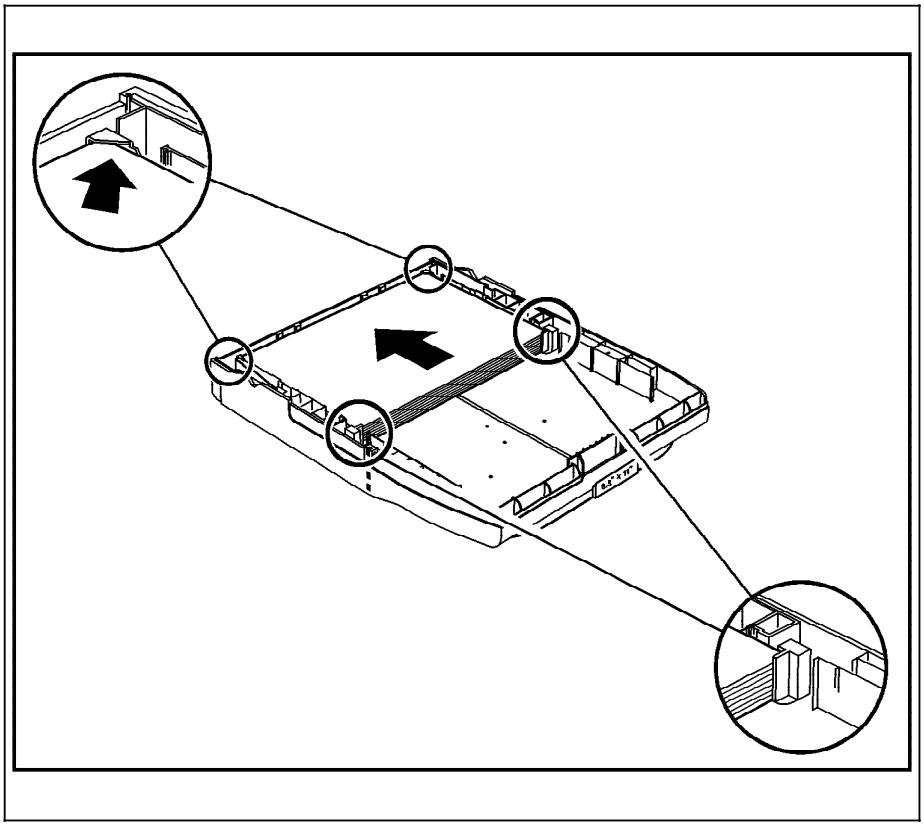

Figure 5-3. Paper Is Under the Corner Tabs

Step 3. Remove any paper left in the paper tray slot by pulling it gently out of the printer from the

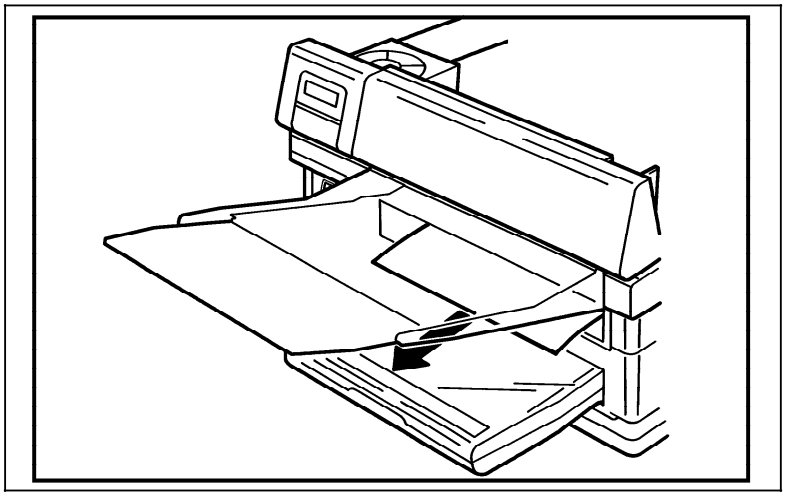

Figure 5-4. Removing the Paper Left in the

Step 4. Hold down the (upper, middle, or lower) rear paper access cover and remove any visible paper

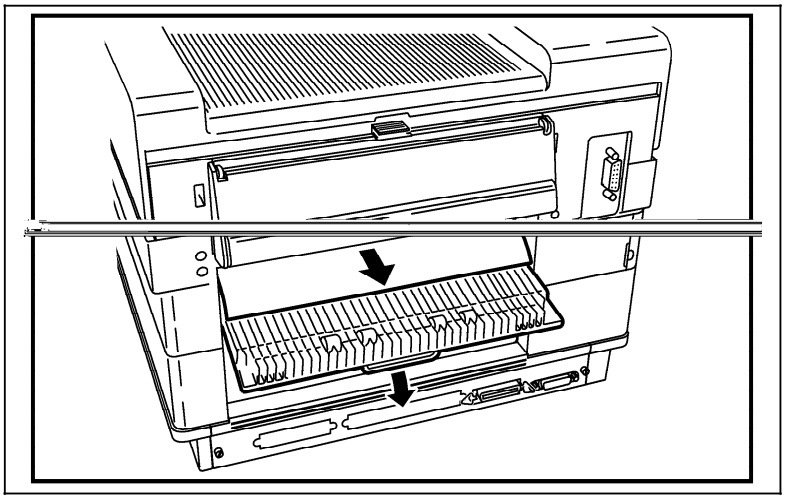

Figure 5-5. Holding Down the Paper Access

Step 5. Reinstall the paper tray in the printer.

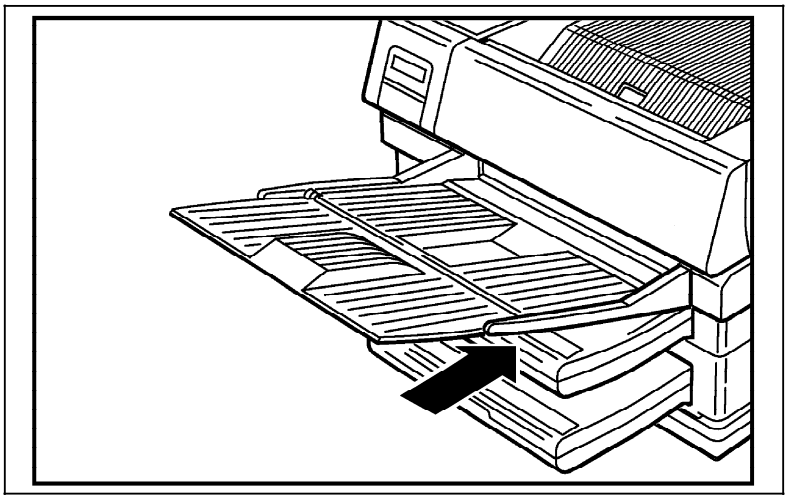

Figure 5-6. Reinstalling the Paper Tray

Step 6. Open the top cover by pressing the top cover

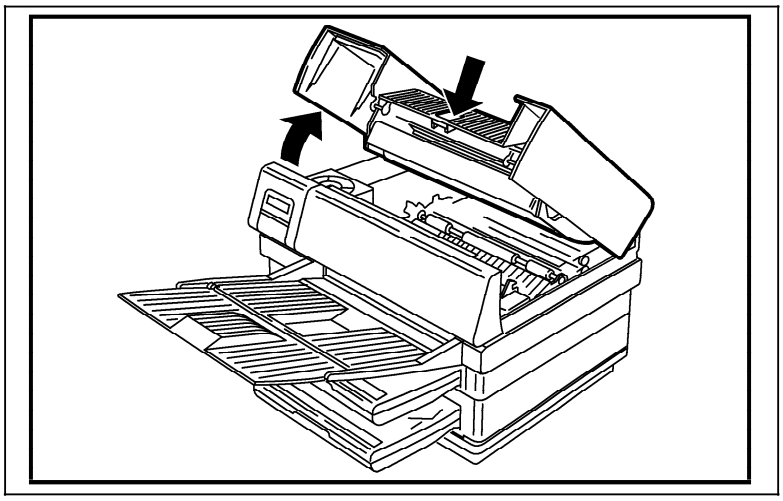

Figure 5-7. Opening the Top Cover

WARNING: Inside the printer may be

B

Step 7. Remove any paper visible in the transport area inside the printer by pulling it gently upwards and towards the rear of the printer, opposite the paper flow. Lift the paper transport cover

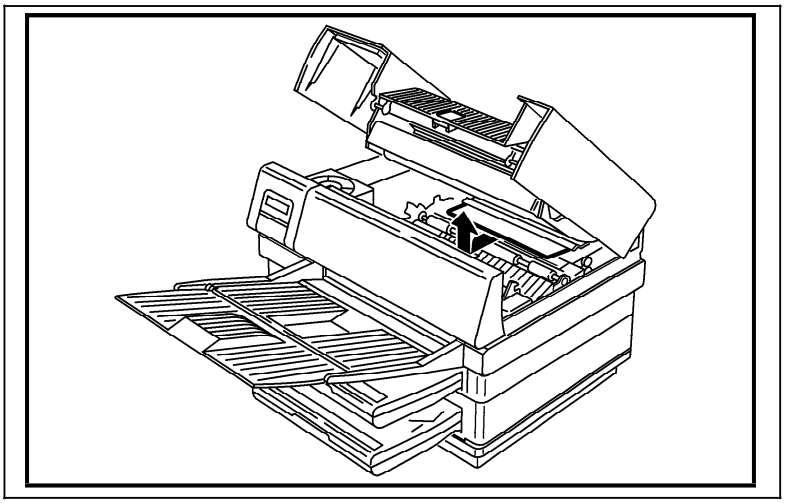

Figure 5-8. Removing the Paper from the

Step 8. Close the top cover by pushing it down firmly until it latches into place and is flush with

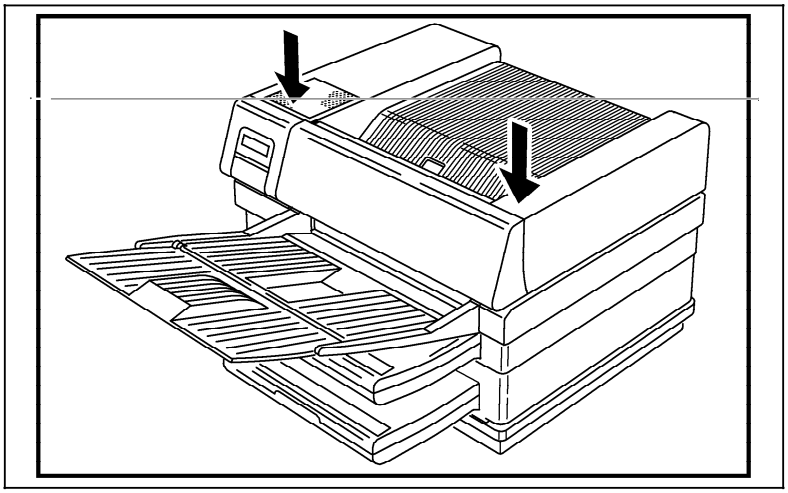

Figure 5-9. Closing the Top Cover

NOTE: You must open and close the top cover to clear the error message. You need to do this even when there is no jammed paper inside the

Paper Path Clearing Procedures: Manual Feed Tray

Step 1. Remove any paper left in the manual feed slot

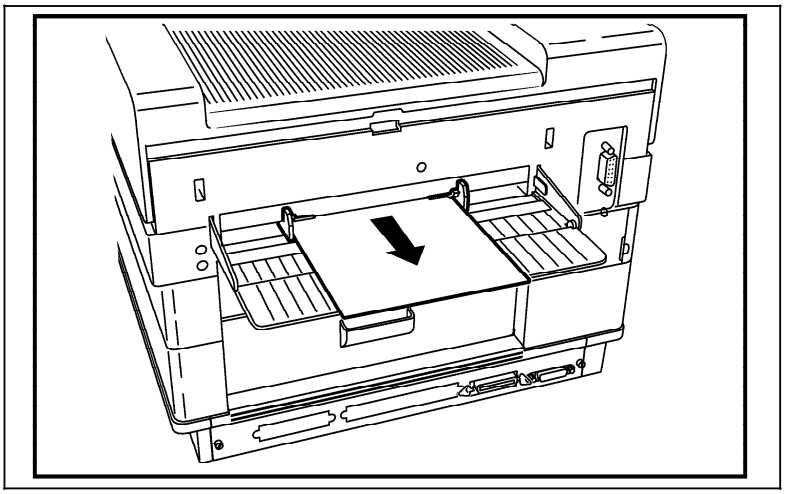

Figure 5-10. Removing the Paper from the

Step 2. Open the top cover by pressing the top cover

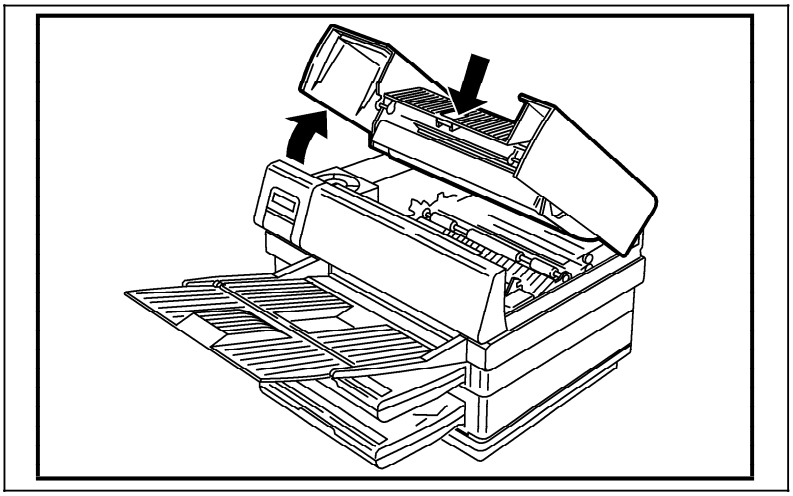

Figure 5-11. Opening the Top Cover

WARNING: Inside the printer may be

B

Step 3. Remove any paper visible in the transport area inside the printer by pulling it gently upwards and towards the rear of the printer, opposite the paper flow. Lift the paper transport cover

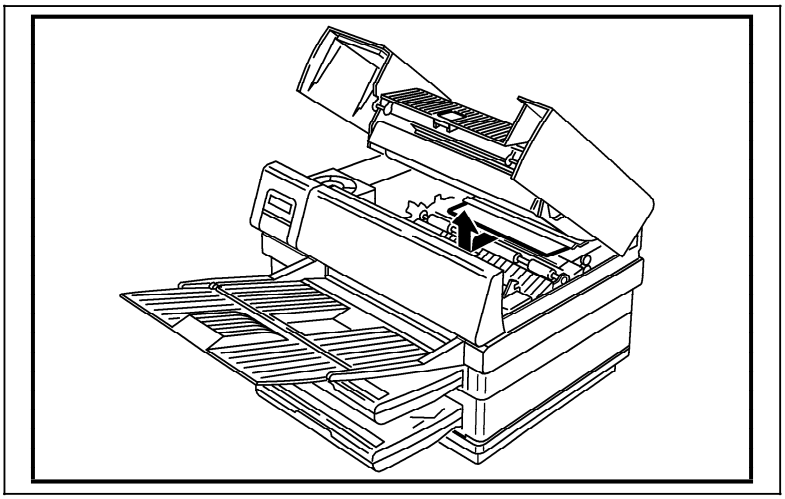

Figure 5-12. Removing the Paper from the

Step 4. Close the top cover by pushing it down firmly until it latches into place and is flush with the cover.

NOTE: You must open and close the top cover to clear the error message. You need to do this

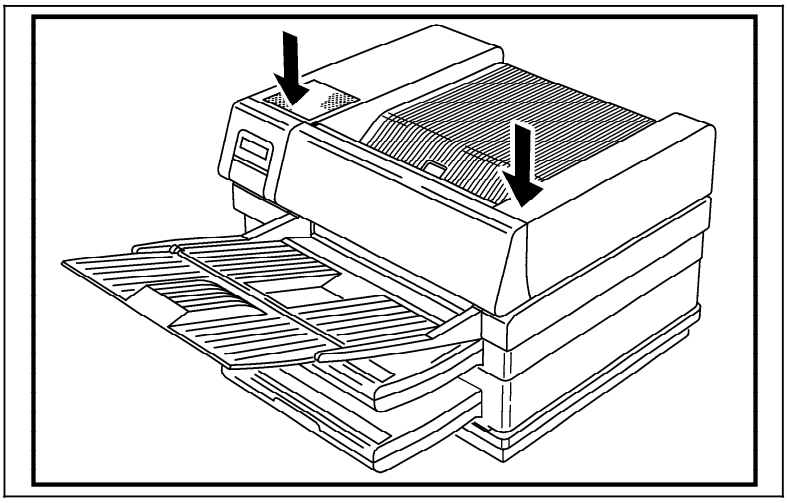

Figure 5-13. Closing the Top Cover

Paper Jam>Fuser

This message can occur as a result of paper jamming between the paper transport area and the fuser area inside the printer.

Paper Path Clearing Procedures

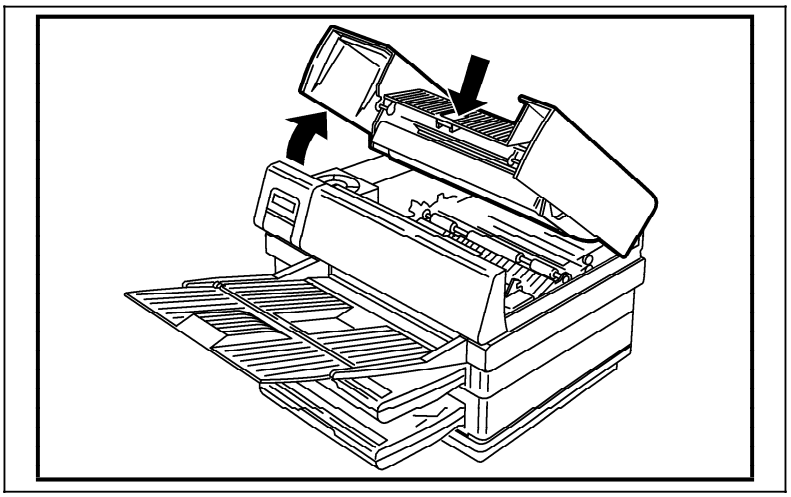

Figure 5-14. Opening the Top Cover

WARNING: Inside the printer may be

B

Step 2. Remove any paper visible in the transport area inside the printer by pulling it gently upwards and towards the rear of the printer, opposite the paper flow. Lift the paper transport cover

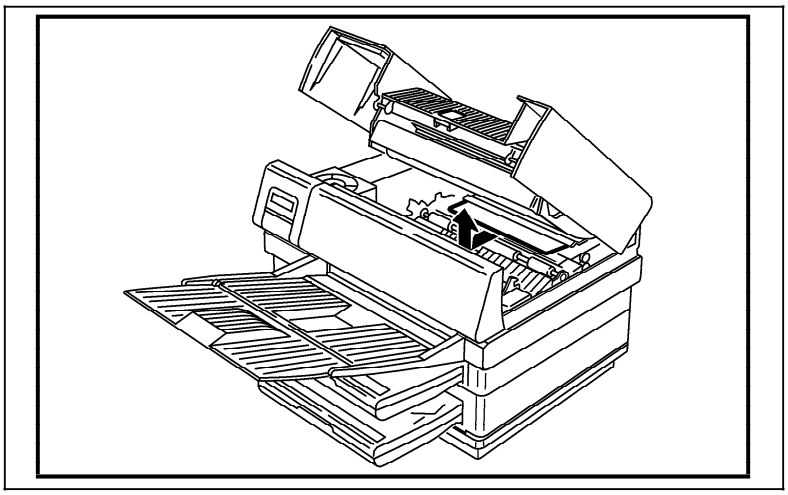

Figure 5-15. Removing the Paper from the

Step 3. Close the top cover by pushing it down firmly until it latches into place and is flush with

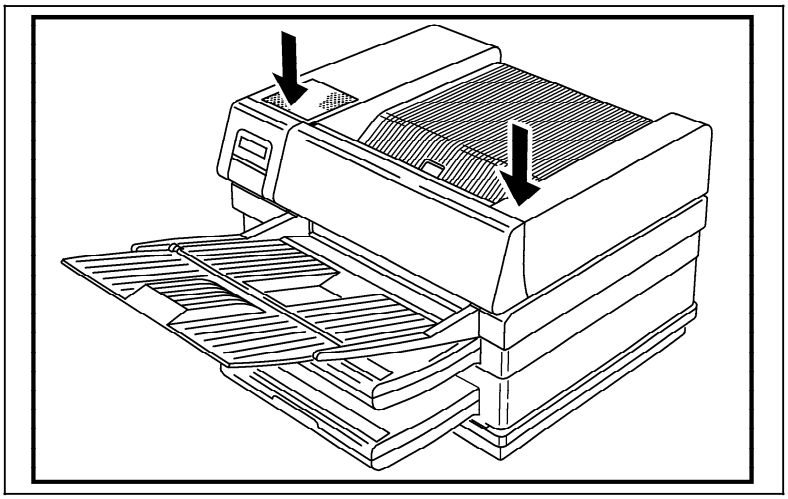

Figure 5-16. Closing the Top Cover

Paper Jam>Exit

This message can occur as a result of paper jamming as it exits the printer to either output tray.

Paper Path Clearing Procedures

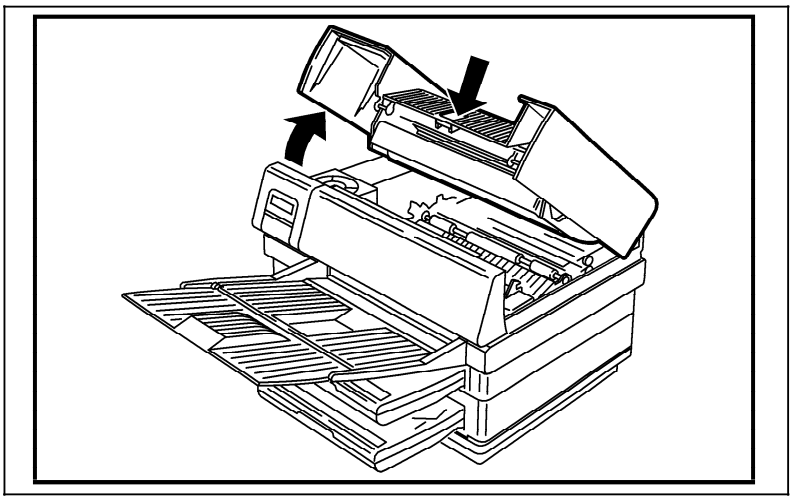

Figure 5-17. Opening the Top Cover

WARNING: Inside the printer may be

B

Step 2. Remove any paper visible in the transport area inside the printer by pulling it gently upwards and towards the front of the printer, opposite the paper flow. Lift the paper transport cover

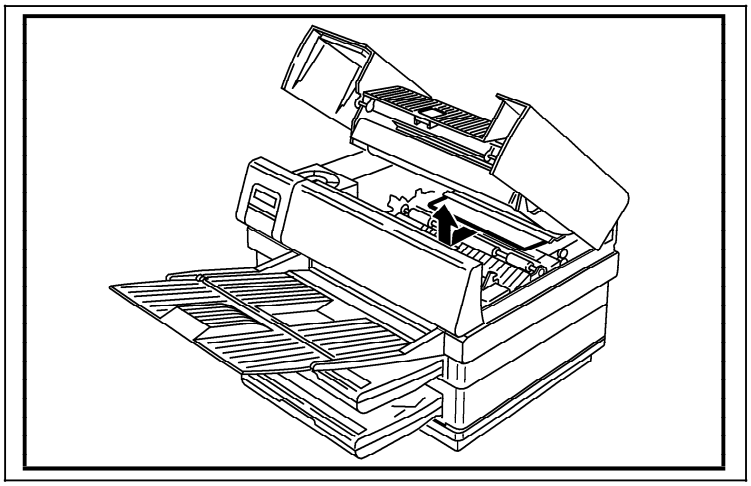

Figure 5-18. Removing the Paper from the

Step 3. Pull down the front cover. Remove any paper jammed in the printer by gently pulling it out from the front.

NOTE: Be careful when removing the paper from this area because loose toner can contaminate

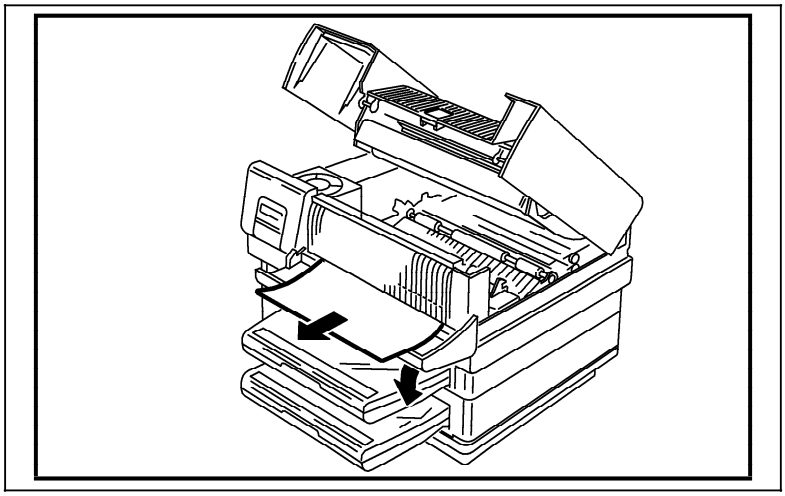

Figure 5-19. Pulling Down the Front Cover and Removing the Paper

Step 4. Close the front cover.

Step 5. Close the top cover by pushing it down firmly until it latches into place and is flush with

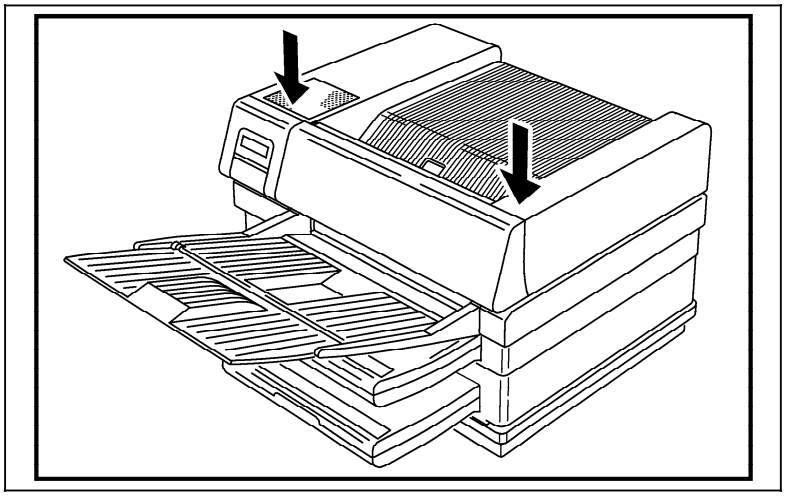

Figure 5-20. Closing the Top Cover

NOTE: You must open and close the top cover to clear the error message. You need to do this even when there is no jammed paper inside the

TONER CARTRIDGE REPLACEMENT PROCEDURES

The printer uses a black powder called toner, which is contained in the toner cartridge. When the cartridge is nearing the end of its service life, the following message displays:

Toner Low

You can make up to 100 more prints after you receive this message.

NOTE: Always keep a spare Toner Cartridge Kit in stock. The toner cartridge is also called the print cartridge.

When the following message appears in the control panel display, you must replace the print cartridge before the printer will resume operation.

CHANGE CARTRIDGE

The following tasks must be completed every time you change the print cartridge to comply with warranty requirements:

- Remove the old toner cartridge
- Replace the fuser cleaning felt
- Replace the corotron

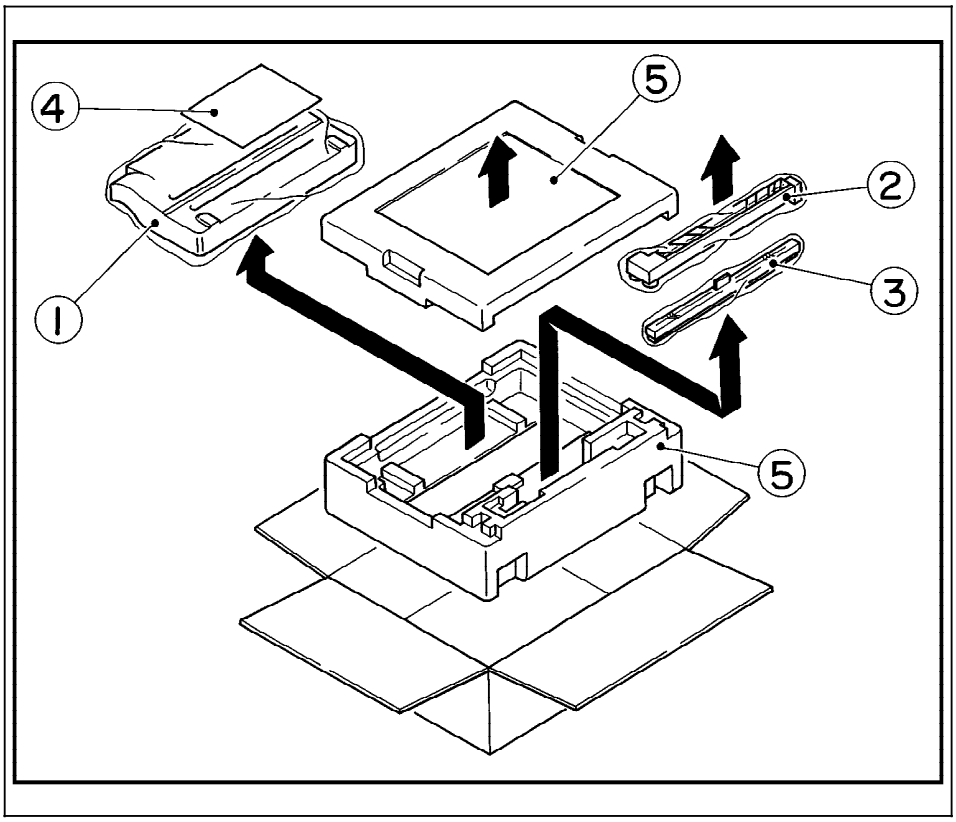

Figure 5-21. Opening the Toner Cartridge Kit

1. Toner cartridge
2. Corotron
3. Fuser cleaning felt
4. Instruction booklet

The Xerox Toner Cartridge Kit is intended for use with the 4219/MRP or the 4215/MRP. This unit has been tested extensively for reliability and is manufactured to standards that ensure high quality. XEROX Corporation, therefore, warrants only the Toner Cartridge Kit that is manufactured or sold by Xerox.

Refer to Appendix E for information on how to order the Xerox Toner Cartridge Kit.

Recycling the Old Toner Cartridge Kit

Xerox believes it is important to safeguard the environment. Therefore, we have created a corporate recycling program which allows you to easily recycle consumable Xerox products at

Removing the Old Toner Cartridge

Remove the old toner cartridge by following the steps below.

Step 1. Switch the printer off at the power switch.

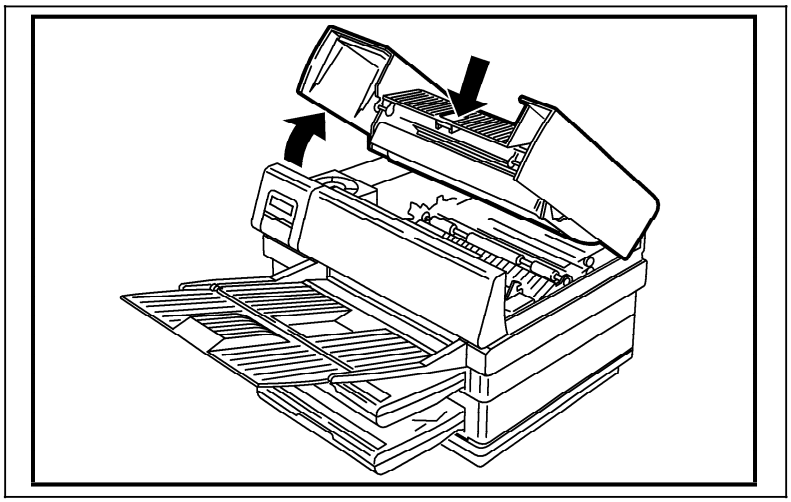

Figure 5-22. Opening the Top Cover

Step 3. Grasp the old toner cartridge and slide it out about one-third of the way. Hold it with both hands and remove it from the printer.

Put the old toner cartridge in the box that

G **CAUTION:** Toner material is flammable. Do not incinerate the old cartridge. Dispose of the old toner cartridge according to local regulations for

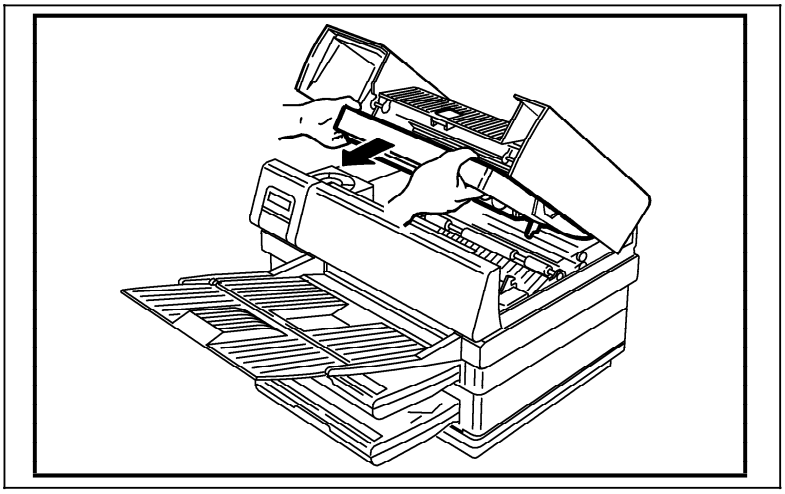

Figure 5-23. Removing the Toner Cartridge

NOTE: Replace the corotron and fuser cleaning felt before installing the new toner cartridge.

Replacing the Fuser Cleaning Felt

A new fuser cleaning felt must be installed every time you change the toner cartridge. The new fuser cleaning felt is included in the same box as the toner cartridge.

REMINDERS:

- The power to the printer should be off. The power switch will be in the O position. If you are just now switching the printer off, wait a *minimum* of five minutes for the printer to cool down.
- The top cover of the printer should be open.

WARNING: The fuser area can be very

B

Step 2. Hold the old fuser cleaning felt by its green tab. Pull firmly by the tab and remove the

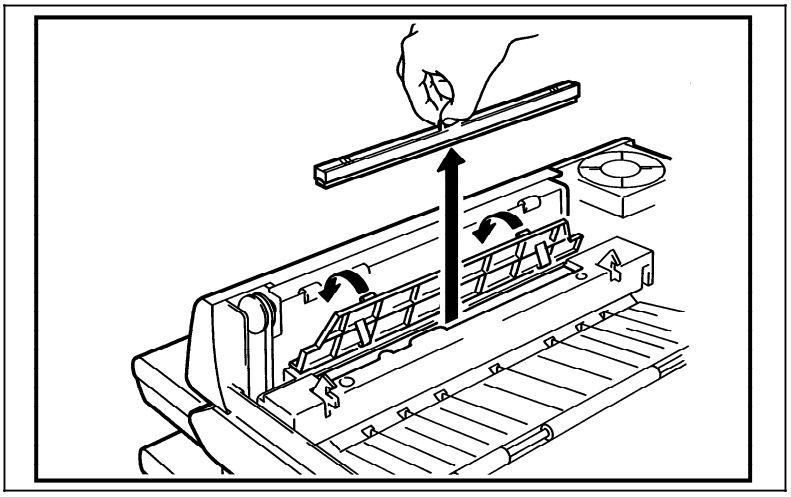

Figure 5-24. Removing the Fuser Cleaning Felt

Step 3. Discard the used fuser cleaning felt.

Step 4. Unpack the new fuser cleaning felt.

G **CAUTION:** Do not touch the felt area on the underside of the cleaning felt.

Step 5. Hold the new fuser cleaning felt by its green tab and install it into the slot in the

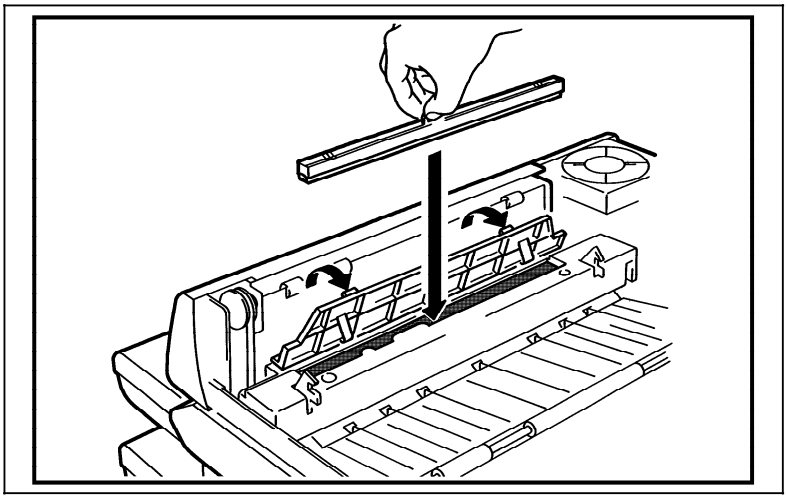

Figure 5-25. Installing the Fuser Cleaning Felt

Step 6. Close the cover over the fuser cleaning felt. The fuser cover is spring loaded and will be secured when you close the top cover.

Replacing the Corotron

A new corotron must be installed every time you change the toner cartridge. The new corotron assembly is included in the same box as the toner cartridge.

REMINDERS:

F The power to the printer should be off. The

Replace the corotron by following the steps below.

Step 1. Grasp the old corotron assembly on the right side (end labeled “2”) and lift it up and out

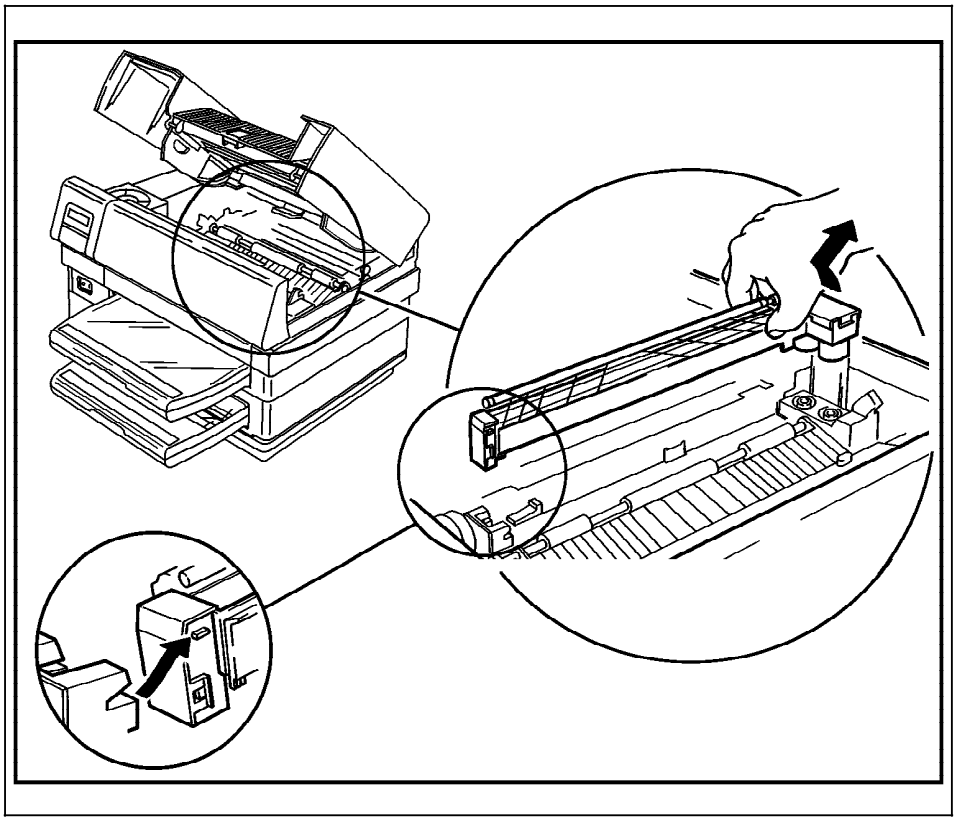

Figure 5-26. Removing the Corotron

Step 2. Unpack the corotron.

G **CAUTION:** Handle the corotron carefully. Do not touch the wire.

Step 3. Hold the new corotron on the right side as shown in Figure 5-27 (labeled “2,” with the lightning bolt symbol). Insert the corotron into the left notch and then gently push down onto the two contacts on the right side. The

Replacing the Toner Cartridge

Replace the toner cartridge by following the steps below.

REMINDERS:

F The power to the printer should be off. The power switch will be in the O position.

F The top cover of the printer should be open. If you have closed the top cover, press the release latch to open the cover.

G **CAUTION:** Do not leave the unwrapped toner cartridge sitting in direct sunlight (as on a window sill) for any length of time. Prolonged exposure to direct light damages the shiny green

Step 2 Hold the new toner cartridge horizontally and rock the cartridge gently from side to side to loosen and distribute the toner.

G **CAUTION:** Be careful not to get fingerprints or scratches on the surface of the green print drum.

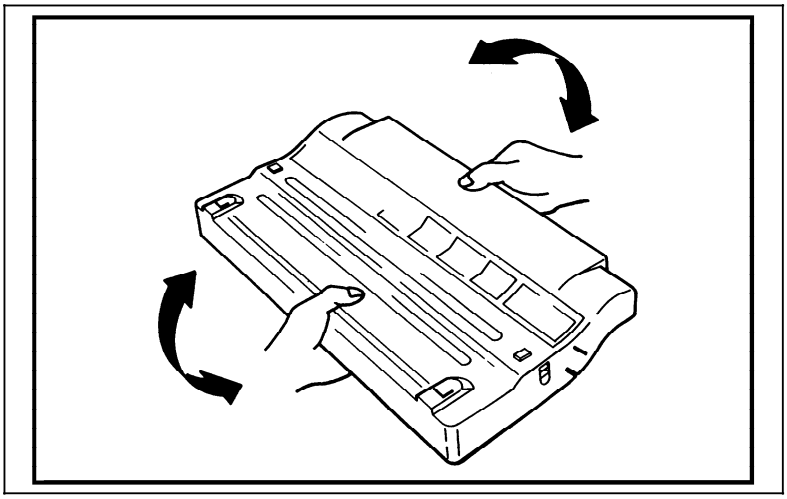

Figure 5-28. Rocking the Toner Cartridge

Step 3. Holding the toner cartridge securely, firmly pull the toner seal (green tab labeled “3”) straight out away from the cartridge, as indicated in Figure 5-29. The toner seal is a ribbon of clear tape that runs the length of

G **CAUTION:** Failure to pull the toner seal straight out may break the seal before it can be completely removed. Damage will occur to the printer if

G **CAUTION:** Be careful with the cartridge as the toner may spill out.

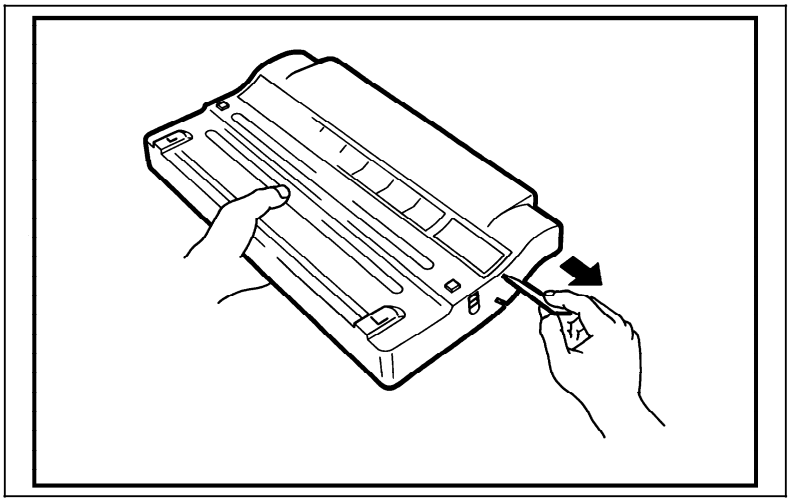

Figure 5-29. Pulling Out the Toner Seal

Step 4. Line up the new toner cartridge with the cavity

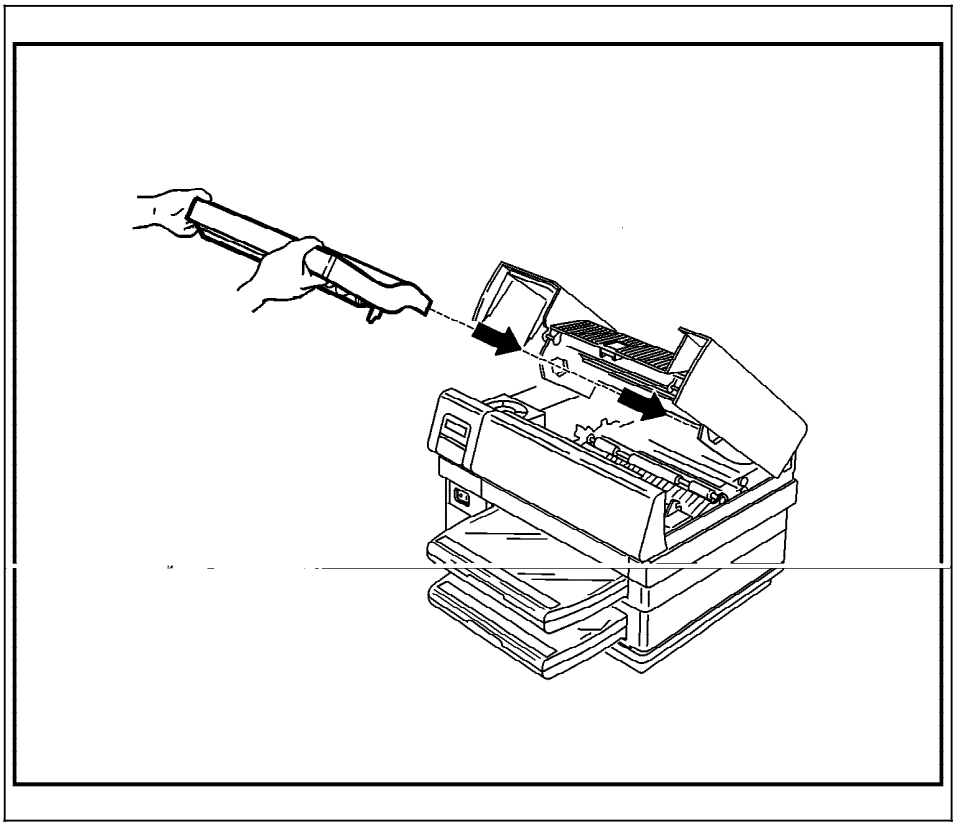

Figure 5-30. Lining Up the Toner Cartridge

Step 5. Slide the cartridge, in the direction of the arrow, into the cavity, ensuring that it is

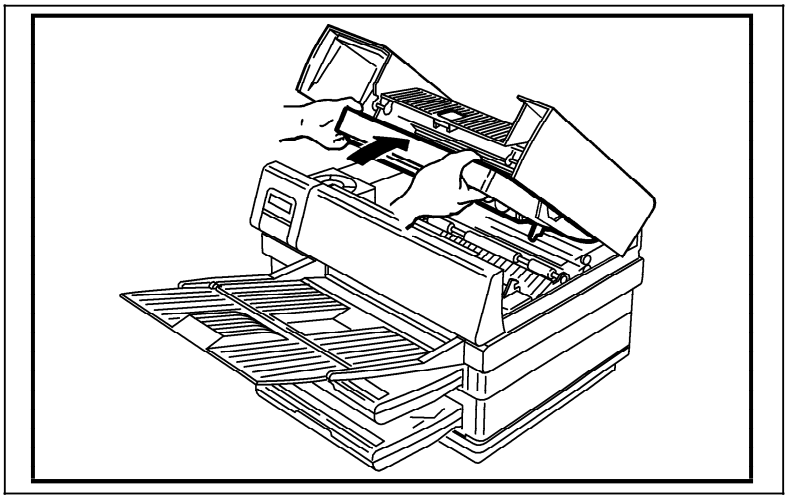

Figure 5-31. Installing the Toner Cartridge

Step 6. Close the top cover by pushing it down firmly until it latches into place and is flush with

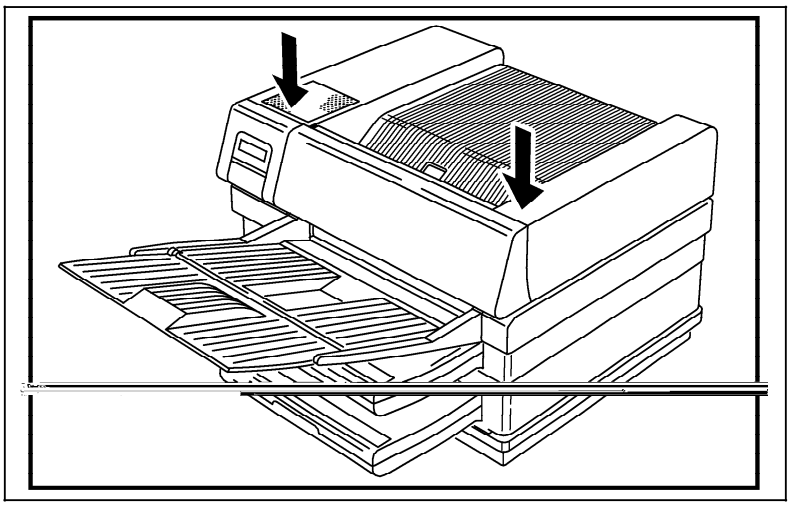

Figure 5-32. Closing the Top Cover

Step 7. Switch the printer on at the power switch.

ADJUSTING THE PRINT DENSITY

The print density has been adjusted to the proper level at the factory and normally does not require any adjustment. From time to time, however, it may be necessary to adjust the print density for darker or lighter prints for one or more of the following reasons:

- When a different paper is used
- When temperature and/or humidity have changed dramatically

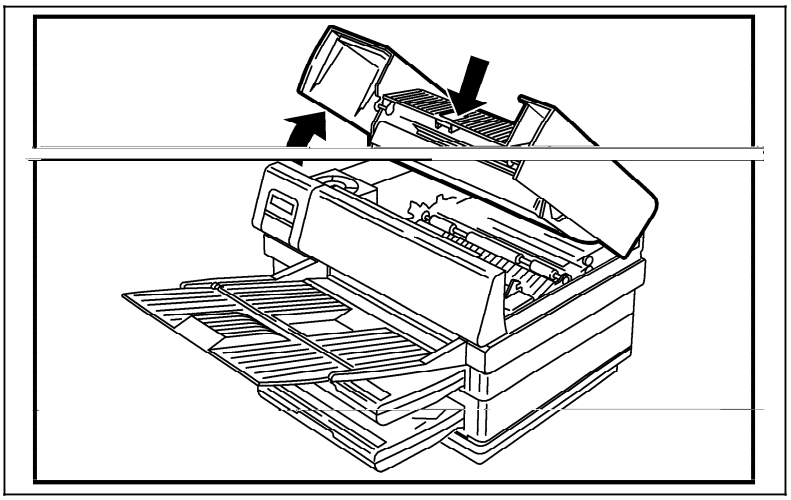

Figure 5-33. Opening the Top Cover

Step 2. Lift the paper transport cover to access the print density control knob. Turn the green print density control knob to the right (clockwise) for darker printing, or to the left (counterclockwise) for lighter printing.

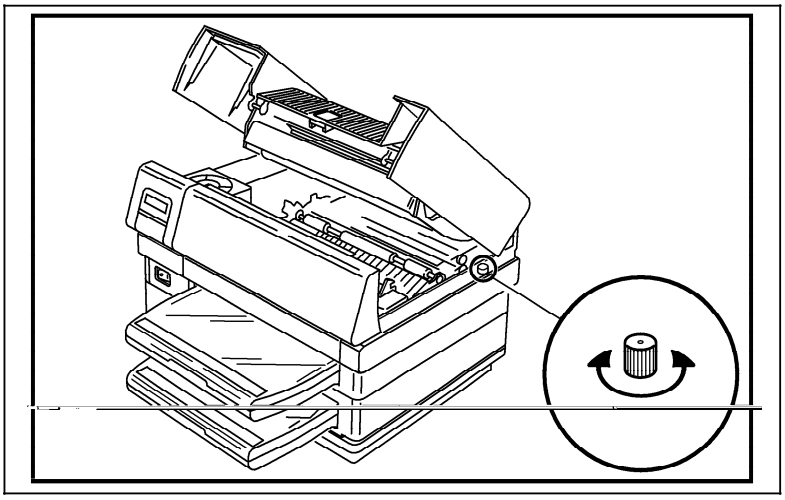

Figure 5-34. Adjusting the Print Density

Step 3. Close the top cover by pushing it down firmly until it latches into place and is flush with

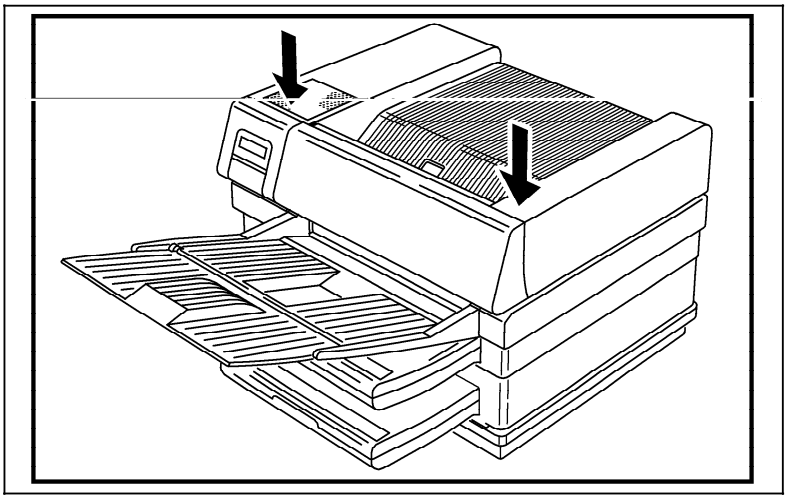

Figure 5-35. Closing the Top Cover

MAINTENANCE

This section gives you procedures to maintain your printer for optimum printer performance.

Fuser Replacement

For optimum quality and to maintain warranty requirements, replace the fuser after every 200,000 pages of printing. Page count can be determined from the Start Page on the Hardware Status Report. To print the Hardware Status Report, follow the procedures in the “Hardware Status Report” section found in Chapter 4.

B **WARNING:** Always power off and unplug the printer before beginning service

B **WARNING:** The fuser area can be very hot. Power off the printer for a minimum of 30 minutes before the fuser

Before an Extended Shutdown

When you will not be using the printer for more than one week, do the following:

1. Switch the printer off at the power switch.
2. Unplug the power cord.
3. Remove the paper trays and store them in a place that is less susceptible to moisture

Cleaning the Printer

When the printer exterior becomes dirty, clean it keeping the following points in mind:

B **WARNING:** The power to the printer should be off before cleaning the printer. The power switch should be

---

F Use a soft cloth to remove dust and dirt on the outer surface of the printer.

F If dirt is hard to wipe off with a dry cloth, clean it with a cloth dampened with water or a mild detergent dissolved in water.

POWER CORD REQUIREMENTS

The power cord you received with your printer meets the requirements of the country where you purchased the product. If you use the printer in another country, you must use a power cord that meets the requirements of that country. For more information on power cord requirements, contact your Xerox equipment supplier.

The following information explains the requirements for power cord selection.

General Information

1. The cord must be approved for the country where it will be used.
2. The appliance coupler (that is, the connector to the device itself, not the wall plug) must have a configuration for mating with a EN 60320/IEC 320 appliance inlet (Standard Sheet C14).
3. The length of the cord set must be as follows:

   Minimum 6.50 ft. (2.0 m)

   Maximum 9.75 ft. (3.0 m)

U.S. and Canada

1. The cord must be UL-Listed and CSA-

Japan

1. The cord must be MITI approved.
2. The flexible cord must be a VCT or VCT F 3-conductor cord with a minimum conductor size of 1.50 square millimeters.
3. The cord must have a rated current capacity of 12A.
4. The attachment plug must be an earth grounding type JIS 8303 (15A, 125V) configuration.

Other Countries

1. The cord fittings must bear the certification mark of the agency responsible for evaluation in a specific country. Acceptable agencies include:

   BSI (United Kingdom)
   CEDEC (Belgium)
   DEMKO (Denmark)
   EANSW (Australia)
   IMQ (Italy)
   KEMA (The Netherlands)
   NEMKO (Norway)
   OVE (Austria)
   SEMKO (Sweden)
   SETI (Finland)
   SEV (Switzerland)
   UTE (France)
   VDE (Germany)

2. The flexible cord must be of a HAR

ELECTROSTATIC DISCHARGE

A discharge of static electricity from a finger or other conductor may damage system boards or other static-sensitive devices. This type of damage may reduce the life expectancy of the device.

PREVENTING ELECTROSTATIC DAMAGE

To prevent electrostatic damage, observe the following precautions:

- Avoid hand contact by transporting and storing products in static-safe containers.
- Keep electrostatic-sensitive parts in their containers until they arrive at static-free work stations.
- Place parts on a grounded surface before removing them from their containers.
- Avoid touching pins, leads, or circuitry.
- Always be properly grounded when touching a static-sensitive component or assembly.

GROUNDING METHODS

There are several methods for grounding. Use one or more of the following methods when handling or installing electrostatic-sensitive parts:

- Use a wrist strap connected by a ground cord to a grounded workstation or computer chassis. Wrist straps are flexible straps with a minimum of 1 megohm +/- 10 percent

F Use conductive field service tools.

F Use a portable field service kit with a folding static-dissipating work mat.

If you do not have any of the suggested equipment for proper grounding, have a Xerox service representative install the part.

A **IMPORTANT:** For more information on static electricity, or assistance with product installation, contact your

DIAGNOSTICS AND TROUBLESHOOTING

This appendix includes:

- Tips for problem solving
- Error Log
- A status and error message table
- Print quality problem solving table

IDENTIFYING PROBLEMS ON THE PRINTER

This appendix lists problems that can affect the quality of your printed output. If you are experiencing any of the conditions listed, check to find the proper corrective action. If unable to correct the problem, call your Xerox service representative and describe the condition that produced the problem.

SERVICE

Your Xerox service representative will supply you with your local Xerox Customer Service Support Center phone number. Write this number and your printer serial number (embossed on the plate inside the front cover) below for easy reference.

Customer Service Support Center telephone number:_____

The representative will attempt to help you correct the problem over the phone. If the problem cannot be resolved, a service representative will call you to schedule a time to service your printer.

When the Xerox service representative arrives, provide the following information:

- Any error messages that were displayed
- The problem output in the order in which it was printed.

XEROX CUSTOMER SUPPORT

There may be times when you are unsure where the problem resides (printer, host computer, hardware, etc.) or if a problem even exists.

Technical personnel are available at Xerox Customer Support to provide you with answers to technical inquiries and/or direct you to available reference documentation to solve informational or application problems.

Information You Need

Your key to effective use of Xerox Customer Support is to identify the problem correctly. Before calling the center, it is helpful to:

- Note your printer serial number and the data written on the information label (see Figure D-1 for the location of the printer serial number and information label)

- Were any changes made on the host computer (e.g., system software)?
- Has any service been performed on your printer recently?
- Did the application print properly prior to this problem?

F Determine the severity of the problem. Use the following categories to determine how the problem impacts operation of the printer:

- **Failure**: Indicates an inability to produce a critical job.
- **Error**: Indicates a degradation of performance exists but system operations can continue.
- **Information Only**: Indicates there are no system problems, but a request for information is necessary.

Calling Customer Support

Before calling Customer Support, make sure you have read the following problem solving tables in this appendix and have tried the corrective action or actions listed:

- Table D-1, Status and Error Messages
- Table D-2, Print Problem Solving

If the problem persists, gather the information about your problem and call the Customer Support number.

In the United States, the Xerox Customer Support Center is open between 5 a.m. and 5 p.m. The phone number is 1-310-333-0501

In Canada, the Xerox Product Support Centre is open between 8:30 a.m. and 5 p.m. (local time). The phone numbers are

Toronto local:	416-477-0143
English-National:	1-800-387-4314
French-National:	1-800-387-4300

Your call will be answered by a central call administrator, who will ask you for your equipment model:

XEROX 4215/MRP

XEROX 4219/MRP

Your call will be handled by a product

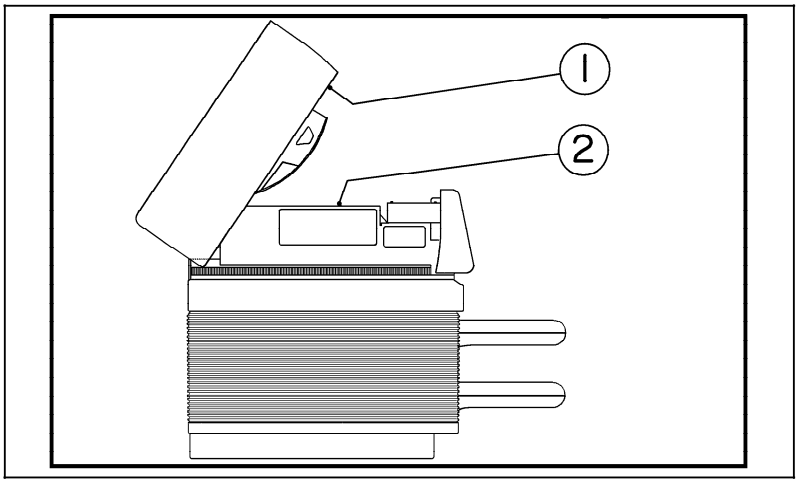

Figure D-1. Location of Printer Serial Number and Information Label

1. Serial Number
2. Label

ERROR LOG

The printer stores a record of many of the errors listed in this appendix. Each error, written to the Error Log, is identified by a unique error number.

Figure D-2. Error Log

Printing the Error Log

Follow these steps to manually print the Error Log:

Step 1. Press the **Menu** key. The printer is automatically placed offline and in menu mode. The display reads:

LANGUAGE
=English

Step 2. Press the **Down** arrow key until the display reads:

PRINT REPORTS

Step 3. Press the **Enter** key. The display reads:

Font Report

Step 4. Press the **Down** arrow key until the display reads:

Error Log

Step 5. Press the **Enter** key. “*Selected*” displays

TABLE OF STATUS AND ERROR MESSAGES

Table D-1 is an alphabetical listing of the status and error messages that may appear in the message display of the printer control panel. Also shown is an explanation of the problem and what you can do to correct it.

NOTE: Chapter 5, “Care and Maintenance,” provides more information on correcting

Table D-1
Status and Error Messages

Control Panel	Printer Action	Operator Action
CHANGE CARTRIDGE	The beeper sounds five times at approximately one second intervals. All communication channels are set to “BUSY.” The error is	Switch off power. Replace the toner cartridge. Refer to Chapter 5, “Care and Maintenance” for toner cartridge
CHECK SYSTEM	This message appears only at power-up. Printer will not accept any print jobs.	Turn the printer off at the power switch. Unplug the printer from the wall outlet. Call your Xerox service

Continued

Table D-1
Status and Error Messages

Control Panel	Printer Action	Operator Action
CLOSE	The beeper sounds five times at approximately one second intervals. All communication channels are set to “BUSY.”The error is written to the Error Log. Present job is held until cover	Push the top cover down firmly until it latches and is
End of	This message indicates that there are no more menu options	Use the **Up** arrow key or the **Esc** key to continue moving

Continued

Table D-1
Status and Error Messages

Control Panel Message	Printer Action	Operator Action
ERROR: CACHE RAM MODULE	The beeper sounds one time for approximately one second. The error is written to the Error Log. The appropriate message displays for 30 seconds at the control panel. Printer continues normal operation on factory defaults or	Note the error message displayed and call your Xerox
ERROR: DRAM MODULE #n (where n identifies	The beeper sounds one time for approximately one second. The error is written to the Error Log. The appropriate error message displays for 30	Call your Xerox service representative and report the

Continued

Table D-1
Status and Error Messages

Control Panel Message	Printer Action	Operator Action
ERROR: EEPROM	The beeper sounds one time for approximately one second. The error is written to the Error Log. The appropriate message displays for 30 seconds at the control panel. Printer continues normal operation on factory defaults or	Note the error message displayed and call your Xerox

Continued

Table D-1
Status and Error Messages

Control Panel	Printer Action	Operator Action
ERROR: FIXED DISK	The beeper sounds one time for approximately one second. The error is written to the Error Log. The appropriate message displays for 30 seconds at the control panel. Printer continues normal operation on factory defaults or	Note the error message displayed and call your Xerox service
ERROR: FIXED DISK	The beeper sounds one time for approximately one second. The appropriate error message displays for 30 seconds at the control panel. The fixed disk drive has reached maximum capacity.	Remove unneeded PostScript fonts from your hard

Continued

Table D-1
Status and Error Messages

Control Panel	Printer Action	Operator Action
ERROR: FONT MODULE	The beeper sounds one time for approximately one second. The error is written to the Error Log. The appropriate error message displays for 30 seconds at the control panel. Printer continues	Note the error message displayed at the control panel. Call your Xerox service representative

Continued

Table D-1
Status and Error Messages

Control Panel	Printer Action	Operator Action
ERROR: LOW RES	The beeper sounds one time for approximately one second. The error is written to the Error Log. The appropriate error message displays for 30 seconds at the	None
ERROR: MODULE	The beeper sounds one time for approximately one second. The appropriate error message displays for 30 seconds at the control panel.	Programmable Font Module is full. Remove unneeded PostScript fonts from the Programmable Font

Continued

Table D-1
Status and Error Messages

Control Panel	Printer Action	Operator Action
ERROR: PARALLEL PORT	The beeper sounds one time for approximately one second. The error is written to the Error Log. The appropriate error message displays for 30 seconds at the	Note the error message displayed at the control panel. Call your Xerox service
ERROR: SERIAL	The beeper sounds one time for approximately one second. The error is written to the Error Log. The appropriate error message displays for 30 seconds at the	Note the error message displayed at the control panel. Call your Xerox service

Continued

Table D-1
Status and Error Messages

Control Panel	Printer Action	Operator Action
FAILURE: Bad	This message appears only at power-up. The printer will not accept any print jobs. This	Turn the printer off at the power switch. Unplug the printer at the wall outlet. Call your Xerox
FAILURE: CONTROLLER	The beeper sounds five times at approximately one second intervals. All communication channels are set to “BUSY.” The error is	Turn the printer off at the power switch. Unplug the printer at the wall outlet. Call your Xerox
FAILURE: CONTROLLER FAN	The beeper sounds five times at approximately one second intervals. All communication channels are set to “BUSY.” The error is	Turn the printer off at the power switch. Unplug the printer at the wall outlet. Call your Xerox

Continued

Table D-1
Status and Error Messages

Control Panel	Printer Action	Operator Action
FAILURE: ENGINE CTRL PCB	The beeper sounds five times at approximately one second intervals. All communication channels are set to “BUSY.” The error is	Turn the printer off at the power switch. Unplug the printer at the wall outlet. Call your Xerox
FAILURE: ENGINE FAN	The beeper sounds five times at approximately one second intervals. All communication channels are set to “BUSY.” The error is	Turn the printer off at the power switch. Unplug the printer at the wall outlet. Call your Xerox

Continued

Table D-1
Status and Error Messages

Control Panel	Printer Action	Operator Action
FAILURE: FUSER SYSTEM	The beeper sounds five times at approximately one second intervals. All communication channels are set to “BUSY.” The error is	Turn the printer off at the power switch. Unplug the printer at the wall outlet. Call your Xerox
FAILURE: MAIN MOTOR	The beeper sounds five times at approximately one second intervals. All communication channels are set to “BUSY.” The error is	Turn the printer off at the power switch. Unplug the printer at the wall outlet. Call your Xerox
FAILURE: NEED MORE MEMORY	The beeper sounds five times at approximately one second intervals. All communication	Ensure minimum 8 megabytes of memory is in the

Continued

Table D-1
Status and Error Messages

Control Panel	Printer Action	Operator Action
FAILURE: OPTICAL SYSTEM	The beeper sounds five times at approximately one second intervals. All communication channels are set to “BUSY.” The error is	Turn the printer off at the power switch. Unplug the printer at the wall outlet. Call your Xerox
Flushing	The **Reset** key has been pressed and the printer is flushing data or a PostScript error	None
IDLE	Printer is ready to receive an	None
LOAD (Paper	The beeper sounds five times at approximately one second intervals. All communication channels are set to “BUSY.” Present job is held until paper	Install correct paper size in upper, middle, or lower tray; or, press **Enter** to

Continued

Table D-1
Status and Error Messages

Control Panel	Printer Action	Operator Action
MANUAL FEED	The beeper sounds five times at approximately one second intervals. All communication channels are set to “BUSY.” Printing is halted	The paper in the Manual Feed Tray is preventing paper feed from paper tray. Remove the paper
MANUAL [Paper	Printing is waiting for paper to be inserted in	Load appropriate paper as indicated. To cancel the job, press **Reset**. **NOTE**: Paper or envelopes should not be fed into the manual feed
NEED CARTRIDGE	The beeper sounds five times at approximately one second intervals. All communication channels are set	Switch off power. If the cartridge is present, ensure that it is all the way into the cavity. If

Continued

Table D-1
Status and Error Messages

Control Panel	Printer Action	Operator Action
NO PAPER TRAYS	The beeper sounds five times at approximately one second intervals. All communication channels are set to “BUSY.” Printing is halted until the	Install the appropriate filled
OUTPUT TRAY FULL	The beeper sounds five times at approximately one second intervals. All communication channels are set to “BUSY.” Printing is halted	Remove the paper from the output

Continued

Table D-1
Status and Error Messages

Control Panel	Printer Action	Operator Action
PAPER JAM>EXIT	The beeper sounds five times at approximately one second intervals. All communication channels are set to “BUSY.” The error is written to the Error Log. Present job is held until jam is	Refer to the “Paper Jam>Exit” section in Chapter 5. For transparencies, make sure to remove a completed transparency from the output tray

Continued

Table D-1
Status and Error Messages

Control Panel	Printer Action	Operator Action
PAPER JAM>FUSER	The beeper sounds five times at approximately one second intervals. All communication channels are set to “BUSY.” The error is written to the Error Log. Present job is held until jam is	Refer to the “Paper Jam>Fuser” section in Chapter 5.
PAPER JAM>REAR	The beeper sounds five times at approximately one second intervals. All communication channels are set to “BUSY.” The error is written to the Error Log. Present job is held until jam is	Refer to the “Paper Jam>Rear” section in Chapter 5.

Continued

Table D-1
Status and Error Messages

Table D-1
Status and Error Messages

Control Panel	Printer Action	Operator Action
Restoring Factory Defaults	Printer restores defaults as originally shipped from the factory. Message displays when **Online** and **Help** keys are	None
* Selected	This message displays momentarily when a configuration option is selected	None
Self-test	The printer is performing a self testing process	None

Continued

Table D-1
Status and Error Messages

Control Panel	Printer Action	Operator Action
Start of	This message indicates that there are no more menu options	Use the **Down** arrow key or the **Esc** key to continue moving through the menu options.
Toner Low	The printer is ready but only 100 more prints can be made after this	Prepare to replace the toner

Continued

Table D-1
Status and Error Messages

Control Panel	Printer Action	Operator Action
(UPPER, MID, LOWER)	The beeper sounds five times at approximately one second intervals. All communication channels are set to “BUSY.”The error is written to the Error Log. If tray is a double stack tray, advance “reserve” stack. If “reserve” stack is empty and Auto Tray Swap is enabled, switch to another tray with paper of the same size starting with the upper tray.	Load paper in the requested paper

Continued

Table D-1
Status and Error Messages

Control Panel	Printer Action	Operator Action
(UPPER, MID, LOWER,)	The beeper sounds five times at approximately one second intervals. All communication channels are set to “BUSY.”The error is written to the Error Log. If Auto Swap enabled, finds an appropriate tray and continues with	Install appropriate paper
Waiting...	The printer is waiting for communication from	None unless data still remains after a print job has been sent, but not all pages printed. Refer to the “Last Page Is

PROBLEM SOLVING

The print problems and possible solutions are outlined in Table D-2. When attempting to find a solution to a problem, be sure to read

Table D-2
Print Problem Solving

Print	Explanation	How to Correct
Black Spots or Marks	The paper has spots or marks that repeat on	1. Ensure that the paper used is the proper paper type as specified in Appendix G, “Paper Facts.” 2. If not corrected, replace the toner cartridge. Refer to Chapter 5, “Care and Maintenance,” for these procedures.
Contaminated first	First prints after a Toner Cartridge or Fuser	Run ten prints to remove contamination from paper path.
Damaged	Wrinkles, creases, or any paper defects present on the prints, but not noticeable	1. Flip the paper and reload tray. 2. If the problem is not corrected, add fresh paper. 3. If problem is not corrected, call your

Continued

Table D-2
Print Problem Solving

Print	Explanation	How to Correct
Darkened background	A degree of darkness or contaminatio n, overall or localized, is on the	1. Adjust print density. Refer to Chapter 5, “Care and Maintenance,” for adjustment procedures. 2. If problem is not corrected, replace toner cartridge. Refer to Chapter 5, “Care and Maintenance,” for

Continued

Table D-2
Print Problem Solving

Print	Explanation	How to Correct
Deletions	An area of the print has a missing or an extremely	1. Replace the paper in tray. If paper is damp, use fresh paper. 2. Check the quality of paper or labels. Always use high quality materials. Avoid dusty, dirty, or damaged paper or labels. 3. If the problem is not corrected, remove the toner cartridge and rock it laterally as shown in Figure 5-

Continued

Table D-2
Print Problem Solving

Print	Explanation	How to Correct
Image is light or	The overall image density on the prints	1. Adjust print density. Refer to Chapter 5 for adjustment procedures. 2. If problem is not corrected, replace toner cartridge. 3. Verify corotron is clean. If not, replace it. Refer to Chapter 5, for toner cartridge and corotron

Continued

Table D-2
Print Problem Solving

Print	Explanation	How to Correct
Misfeeds	A paper jam has occurred when the paper was fed from either tray. A PAPER JAM	1. Remove the stack of paper from the tray and fan the paper. Reload the paper in the tray. Fan special paper prior to loading. 2. If problem is not corrected, check that the paper is loaded properly: -Level of paper in the paper tray is not above the Fill Line. -Paper is under the corner tabs. 3. If problem is not corrected, verify that the paper used is within the recommended paper weight. 4. If problem is not corrected, open the rear tray doors, top cover and front

Continued

Table D-2
Print Problem Solving

Print	Explanation	How to Correct
Multifeeds	Multiple sheets of paper exit	1. Remove the stack of paper from the tray and fan the paper. Reload the paper in the tray. Fan special paper prior to loading. 2. If problem is not corrected, check that the paper is loaded properly: -Level of paper in the paper tray is not above the Fill Line. -Paper is under the
No power, power switch is on, “I,”	No power to the printer, even though the printer power switch is in the “I” position and the printer is plugged into	1. Check that the power cable is properly connected at the AC wall outlet. 2. Check that the power cable is properly connected at the AC printer inlet. 3. If problem is not

Continued

Table D-2
Print Problem Solving

Print	Explanation	How to Correct
Page prints landscape instead of portrait when using the Manual Feed Tray or Multipurpos	Some PostScript Level 1 printer drivers do	Feed page long edge instead of short
Printed document is reduced in	Printed document received was not as requested,	Refer to Lines Per Page in Chapter 2, “Using the Control Panel,” for the PCL 5 default number of
Residual	The image from the previous page is transferred	1. Replace toner cartridge. Refer to Chapter 5. 2. If problem persists, call your

Continued

Table D-2
Print Problem Solving

Print	Explanation	How to Correct
Skewed	The image printed on the page is slanted at	1. Check that the paper is loaded properly: -Below the Fill Line -Under both corner tabs. 2. If problem is not corrected, remove the stack and fan the paper. 3. If problem is not corrected, turn the paper over and reload tray. 4. If problem is not corrected, try a different paper tray. 5. If manually feeding, make sure to feed straight. (Refer to the “Manual

Continued

Table D-2
Print Problem Solving

Print	Explanation	How to Correct
Smudges on transparencies and white spots in solid	Corotron is	Replace the corotron. Refer to instructions in Chapter 5, “Care
White spots in solid black area. Smudges or abnormaliti	Corotron is	Replace the corotron. Refer to instructions in Chapter 5, “Care

Continued

Table D-2
Print Problem Solving

Print	Explanation	How to Correct
Unable to generate prints from the host	Prints are not received	1. If “Processing” is displayed in the control panel message area, press the **Online** key to place the printer offline. Press the **Reset** key and then the **Online** key again. If the problem is not corrected, proceed. 2. Press the **Menu** key to place the printer offline and at the Main Menu. Access the SETUP PRINTER menu and select the PRINTOUT MENU option. If the Printer Setup Menu cannot be printed, switch the printer off, wait 10 seconds and switch the printer back on. 3. Try to print the Printer Setup Menu

Continued

Table D-2
Print Problem Solving

Print	Explanation	How to Correct
Unable to generate prints from the host	Prints are not received	5. Make sure the interface cable is connected securely and attached to the correct ports on both the host computer and the printer. Ensure that the cable length does not exceed the specification set for your host system. Then send job again. If the problem is not corrected, proceed to the next step. 6. Put the printer in Hex Dump Mode and resend the print job. Refer to Chapter 2 for procedures. 6a. If no data prints, review host/applications manuals for potential problems, then send job again. If the problem is not corrected, call your Xerox service representative.

OPTIONS AND SUPPLIES: ORDERING INFORMATION

The printer can be upgraded in a number of ways to improve its performance capabilities. These upgrades come in many forms:

- Memory Expansion Kits
- Programmable Font Module
- Additional paper trays
- Internal FAX Modem
- Internal Fixed Disk Drive
- AppleTalk interface board

As part of your normal maintenance, you will need to order the Xerox Print Cartridge Kit.

DESCRIPTION OF OPTIONS

The following options are available to further enhance the capabilities of your printer.

Memory Expansion Kits

The printers are supplied with 4 megabytes of random access memory (RAM) and a 4 megabyte upgrade option for a total of 8-megabytes of memory. Memory Expansion Kits are available in 8-megabyte, and 16-megabyte sizes. Additional memory provides additional font storage and may be required in some cases to print complex

Programmable Font Module

Programmable Font Modules are nonvolatile memory that can be used to permanently store PostScript fonts and forms. PCL, SCS, and IPDS fonts cannot be stored on the Programmable Font Module. The memory modules are available in 1- and 2-megabyte sizes.

Internal FAX Modem

The Internal FAX Modem lets you transmit and receive Group 3 facsimiles as well as PostScript facsimiles. The FAX option kit contains the hardware and the software required for operation.

The FAX option cannot currently be used to send FAX documents from the twinax or coax interfaces, but it can be used to receive FAX documents when connected to a twinax or coax interface.

Internal Fixed Disk Drive

Installing the fixed disk drive option provides additional storage for the printer. The fixed disk drive can store fonts and other PostScript files and data. PCL, SCS, and IPDS fonts cannot be stored on the hard disk.

AppleTalk Interface Controller

Use the following toll-free phone numbers, Monday through Friday 8:30 a.m. to 5:00 p.m. (PST in the U.S., local time in Canada), to order Xerox supplies and accessories:

- In the U. S. the number is: 1-800-822-2200
- In Canada the number for Toronto is: 416-733-9400
- In Canada the number for English-National is: 1-800-668-0199
- In Canada the number for French-National is: 1-800-668-0133
- In Canada the Fax number is: 416-733-3086

When ordering supplies and accessories, provide the following information:

- Printer Model: Xerox 4215/MRP or Xerox 4219/MRP
- Part name or product description: e.g., Paper Tray (Legal, 8.5 by 14 inches)
- Part number: e.g., 109R00098
- Quantity

Table E-1 lists the supplies and accessories that can be ordered.

Table E-1
Options and Supplies

Item	Description	Part Number
Paper	10 reams (5,000 sheets) per carton	
8.5" x	Image Series Dual Purpose Paper	3R2950
8.5" x	Image Series Dual Purpose Paper	3R2954
8.5" x	Image Series Dual Purpose Paper—3 hole	3R3016
8.5" x	Image Series Smooth	3R54
8.5" x	Image Series Smooth	3R83
8.5" x	4024 Dual Purpose	3R721
8.27" x 11.69"	4024 Dual Purpose	3R2594
	4024 Dual Purpose	3R725
8.5" x	4024 Dual Purpose	3R727
8.5" x	4024 Dual Purpose Paper—3 hole	3R2193
8.5" x	4024 Dual Purpose Paper—4 hole	3R3008
8.5" x	4024 Dual Purpose Paper—7 hole	3R3010

Continued

Table E-1
Options and Supplies

Item	Description	Part Number
Paper (continued)	10 reams (5,000 sheets) per carton	
8.5" x	4024 Dual Purpose Paper, 24-lb.	3R2531
8.5" x	4024 Smooth Paper	3R2675
8.5" x	4024 Smooth Paper	3R2677
8.5" x	Antique Parchment Paper—white (4000 sheets per carton)	3R2316
8.5" x	Antique Parchment Paper—gold (4000	3R790
8.5" x	Dual Purpose Colors—	3R3052
8.5" x	Dual Purpose Colors— Blue, 3 hole	3R3068
8.5" x	Dual Purpose Colors—	3R3084
8.5" x	Dual Purpose Colors—	3R3056
8.5" x	Dual Purpose Colors— Green, 3 hole	3R3072
8.5" x	Dual Purpose Colors—	3R3088

Continued

Table E-1
Options and Supplies

Item	Description	Part Number
Paper (continued)	10 reams (5,000 sheets) per carton	
8.5" x	Dual Purpose Colors—	3R3058
8.5" x	Dual Purpose Colors— Pink, 3 hole	3R3074
8.5" x	Dual Purpose Colors—	3R3090
8.5" x	Dual Purpose Colors—	3R3054
	Dual Purpose Colors— Yellow, 3 hole	3R3070
8.5" x	Dual Purpose Colors—	3R3086
8.5" x	Dual Purpose Colors—	3R3060
8.5" x	Dual Purpose Colors— Buff, 3 hole	3R3076
8.5" x	Dual Purpose Colors—	3R3092
8.5" x	Dual Purpose Colors— Goldenrod	3R3062
8.5" x	Dual Purpose Colors— Goldenrod, 3 hole	3R3078
8.5" x	Dual Purpose Colors— Goldenrod	3R3094

Continued

Table E-1
Options and Supplies

Item	Description	Part Number
Paper (continued)	10 reams (5,000 sheets) per carton	
8.5" x	Dual Purpose Colors—	3R3064
8.5" x	Dual Purpose Colors— Ivory, 3 hole	3R3080
8.5" x	Dual Purpose Colors—	3R3096
8.5" x	Dual Purpose Colors—	3R3066
8.5" x	Dual Purpose Colors— Gray, 3 hole	3R3082
8.5" x	Dual Purpose Colors—	3R3098
8.5" x	Dual Purpose Colors— Rainbow Pack (3,500 Sheets per carton) Rainbow pack contains 750 sheets of 8.5" x 11" blue and yellow, 500 sheets each of green and pink, and 250 sheets each of	3R3107
8.5" x	Ring Tuff 3 hole Reinforced Binder Paper (3,000 sheets	3R4299

Continued

Table E-1
Options and Supplies

Item	Description	Part Number
Paper (continued)	10 reams (5,000 sheets) per carton	
8.5" x	Never-tear Paper (100 sheets per box)	3R3118
8.5" x	Never-tear Paper, 3 hole (100 sheets per	3R3109
8.5" x	Image Series Elite	3R1950
8.5" x	Image Series Elite	3R1952
11" x	4024 Dual Purpose Paper (2,500 Sheets	3R729
5.5" x	Statement Paper	3R2072
8.5" x	Recycled Business	3R3704 or 3R4535
8.5" x	Recycled Business Papers—3 hole	3R3706 or 3R4537
8.5" x	Recycled Business	3R3708 or 3R4539

Continued

Table E-1
Options and Supplies

Item	Description	Part Number
Paper (continued)	10 reams (5,000 sheets) per carton	
8.5" x	65 lb. Cover Stock—	3R3041
8.5" x	65 lb. Cover Stock—	3R3044
8.5" x	65 lb. Cover Stock—	3R3045
8.5" x	65 lb. Cover Stock—	3R3046
8.5" x	65 lb. Cover Stock—	3R3042
8.5" x	65 lb. Cover Stock—	3R3043
8.5" x	90 lb. Index—White	3R3004
Transparenc	Xerox transparencies are packaged 100 to a box. All	
Paper backed		
Clear		3R3028
Blue		3R3112
Rainbow		3R3115

Continued

Table E-1
Options and Supplies

Item	Description	Part Number
Transparencies	Xerox transparencies are packaged 100 to a box. All	
Duplicator		
Clear with white		3R2780
Completely clear (with no		3R3117
Removable paper		3R3108
Removable paper	Blue	3R3515
Removable paper	Clear	3R3516

Continued

Table E-1
Options and Supplies

Item	Description	Part Number
Labels, (self-	All labels are on 8.5" x 11" sheets,	
Standard 33 labels		3R4469
24 labels		3R4471
8 labels per		3R4472
Non-perforated sheet		3R4473
High speed 33		3R3139
6 labels per		3R3146

Continued

Table E-1
Options and Supplies

Item	Description	Part Number
1-Megabyte Programmabl e Font	Nonvolatile memory that can be used to permanently store	97K13160
2-Megabyte Programmabl e Font	Nonvolatile memory that can be used to permanently store	97K13170
8-Megabyte Memory Expansion	Two 4-megabyte memory expansion modules	97K13140
16-Megabyte Memory Expansion	Two 8-megabyte memory expansion modules	97K13150
Internal FAX Modem (U.S. and Canada	Receives and sends a FAX or file created with the PostScript page description	93K13220

Continued

Table E-1
Options and Supplies

Item	Description	Part Number
Internal Fixed Disk	Expands the nonvolatile storage capacity of the	97K13200
Laser printer Twinax		97K16320
Laser printer Coax		97K16330
Laser printer IPDS		
AppleTalk Interface		97K13220
High Capacity	210x297 mm (double stack)	109R00094
High Capacity Paper Tray	8.5x11 inches (double stack)	109R00095
Letter Paper Tray	8.5x11 inches (single stack)	109R00096
A4 Paper	210x297 mm (single stack)	109R00097

Continued

Table E-1
Options and Supplies

Item	Description	Part Number
Legal Paper Tray	8.5 x 14 inches (single stack)	109R00098
Ledger Paper Tray	11 x 17 inches (single stack)	109R00099
A5 Paper	148 x 210 mm (single stack)	109R00100
A3 Paper	297 x 420 mm (single stack)	109R00101
B4 Paper	257 x 364 mm (single stack)	109R00102
Toner Cartridge	Kit contains the toner cartridge, fuser cleaning felt,	106R00053 (New) 106R00054

Continued

Table E-1
Options and Supplies

Item	Description	Part Number
Cables-		
T-cable	Connects the 4219/MRP and 4215/MRP to standard IBM twinax	152K66220
Cables- Serial	All RS232 serial cables are male to male, 25 pins at each	
10-ft. (3-		9R80970
15-ft. (4.5-		9R80252
25-ft. (7.5-		9R80254
50-ft. (15-		9R80256
Cables- Parallel (Centronics	Parallel cable for PC environments	9R89336

INTERFACE SUPPORT

The printer is delivered standard with the following interfaces:

- Twinax or coax interface card
- RS-232C serial
- Centronics parallel

These interfaces support simultaneous communication; that is, the printer can receive data on all interfaces simultaneously.

You must supply the interface cables to connect the printer to your host. Shielded signal cables must be used with this equipment to maintain compliance with FCC regulations.

NOTE: The twinax and coax interface setup and configurations are discused in Chapter 3, “Configuring the Interface Card.”

Parallel Interface Connector

The Centronics parallel interface uses a standard 36-pin connector. A standard female

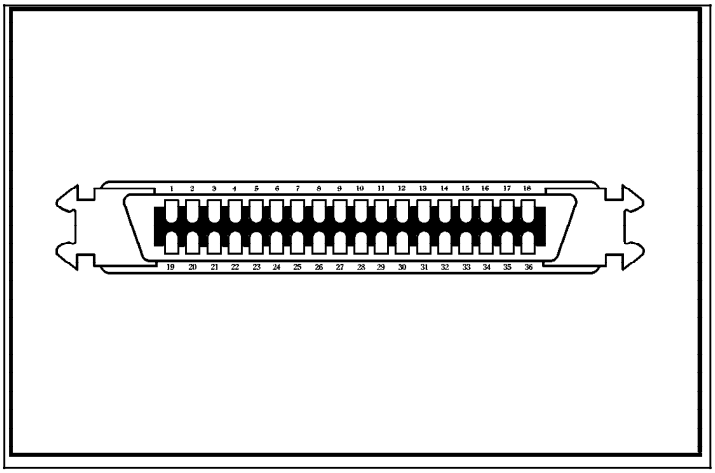

Figure F-1. Centronics interface connector

Parallel Interface Connector Pin Assignments

The parallel interface signals and functions are given in the following table.

Table F-1
Parallel interface connector pin assignments

Pi	Signal Name	Source	Function
1	STROBE*	Host	Causes PD 0—7 to be loaded into the
2	PD 0	Host	Parallel Data Bit 0
3	PD 1	Host	Parallel Data Bit 1
4	PD 2	Host	Parallel Data Bit 2
5	PD 3	Host	Parallel Data Bit 3
6	PD 4	Host	Parallel Data Bit 4
7	PD 5	Host	Parallel Data Bit 5
8	PD 6	Host	Parallel Data Bit 6
9	PD 7	Host	Parallel Data Bit 7
10	ACK*	Printe	Acknowledgement of data received by
11	BUSY	Printe	Indicates printer not ready to receive data
12	PE	Printe	Indicates paper error
13	SLCT	Printe	Indicates printer is selected and online
14	AUTOFD*	Host	Instructs printer to auto feed 1 line of paper after a
15	No connectio		
16	GND		Signal Ground

*Signal is active low

Continued

Table F-1
Parallel interface connector pin assignments

Pin	Signal Name	Sourc	Function
17	Frame		Frame Ground
18	No connectio		
19—30	GND		Signal Grounds
31	INIT*	Host	Initializes printer and clears print
32	ERROR*	Print	Indicates a printer error condition
33	No connectio		
34	No connectio		
35	No connectio		
36	SLCTIN*	Host	Selects printer or host and enables to

*Signal is active low

Parallel Interface Timing Diagram

Figure F-2 illustrates the parallel interface timing. Refer to Table F-2 for timing

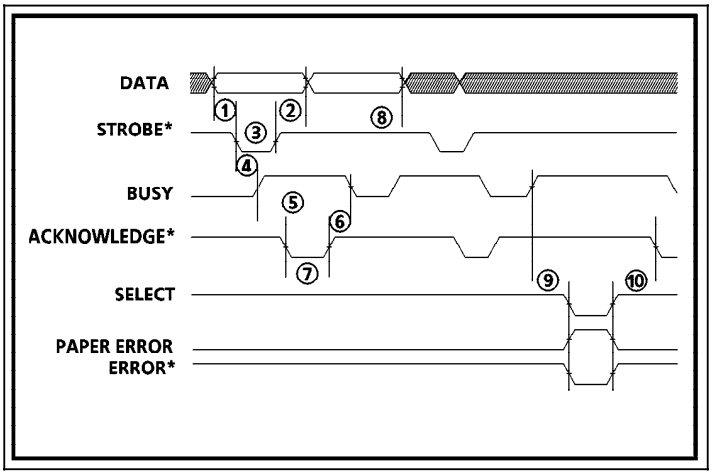

Figure F-2. Parallel interface timing diagram

Table F-2
Timing Requirements

	Parameter	Value	
		Min	**Max**
1	Data Setup Time before STROBE* True	.5 µs	—
2	Data Hold Time after STROBE False	.5 µs	—
3	STROBE* True pulse	.5 µs	—
4	STROBE* True to BUSY	0	.5 µs
5	BUSY True duration when receiving data	.5 µs	—
6	ACKNOWLEDGE* False to BUSY False	0	—
7	ACKNOWLEDGE* True pulse width	.5 µs	—
8	BUSY False to start of next cycle	0	—
9	BUSY True before: ERROR* set True SELECT set False PAPER ERROR set True	1.0 µs	—
10	ACKNOWLEDGE True after: ERROR set False SELECT set True	1.0 µs	—

*Signal is active low

SERIAL INTERFACE

Serial Interface Connector

The serial interface uses a standard D-type 25-pin connector. A standard female serial

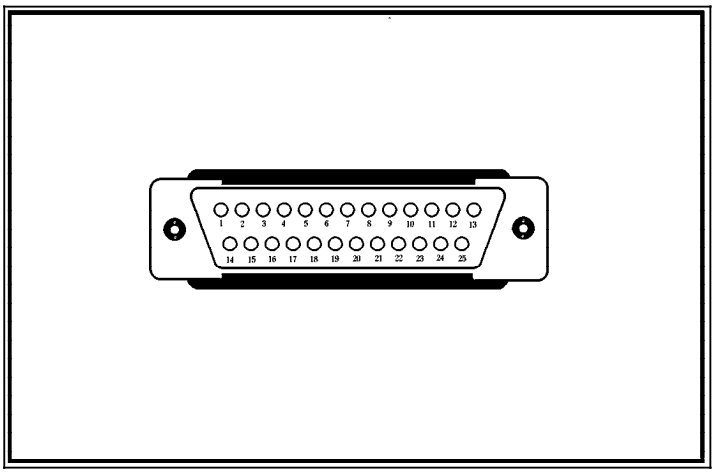

Figure F-3. RS-232C serial interface connector

Serial Interface Connector Pin Assignments

The serial interface signals and functions are given in the following table.

Table F-3
Serial interface connector pin assignments

Pin	Signal Name	Function
1	Frame GND	Frame Ground
2	TXD	Transmitted Data
3	RXD	Received Data
4	RTS	Request to Send
5	CTS	Clear to Send
6	DSR	Data Set Ready
7	GND	Signal Ground
8—19	No	
20	DTR	Data Terminal Ready
21—25	No	

PAPER FACTS

Paper is a critical item. Select, store and load paper properly to avoid paper jams and poor print quality. This chapter provides information on the following:

- Paper and print material specifications
- Paper storage requirements
- Envelope specifications

PAPER AND PRINT MATERIAL GUIDELINES

The paper should be of good quality, free of cuts, nicks, tears, spots, loose particles, dust, wrinkles, voids, and curled or bent edges. The use of good quality paper ensures good image transfer and toner fixing without excessive curl. It is recommended that you test a particular paper, prior to large purchases, to determine if the performance is acceptable. This section contains guidelines for you to follow when selecting print material to be used with your printer.

Print material that does not meet the guidelines outlined in this section may:

- Increase paper jams.
- Cause unnecessary wear in the printer.
- Degrade print quality.

The printer can also use special paper such as:

- Colored paper
- Predrilled paper
- Letterhead paper
- Preprinted forms
- Labels
- Transparencies
- Nonstandard sized paper (e.g. envelopes)
- Card stock

Xerox Dual Purpose colored paper, predrilled paper, labels and transparencies are recommended. When ordering Xerox paper supplies in the United States and Canada, refer to Appendix E for a supplies list and ordering information. All other countries, contact your Xerox representative for part numbers and ordering information.

Colored Paper

Do not use paper with a colored coating that

Card Stock

For optimum performance, use card stock in weights from 16 to 28 pound (60 to 105 gsm). Using card stock over 36 pound may cause printer dysfunctions.

NOTE: The paper industry uses the term, basis weight. For example, when you see paper listed as 28 pound paper, you are being given a weight specification. In English units, basis weight refers to the weight in pounds of 500 sheets of 17 by 22 inch paper. Basis weight is measured on a metric scale as the weight, in grams, of one square meter of paper.

Preprinted Forms

Notify your supplier that the preprinted form is used with a laser printer. Forms must be printed with heat-resistant inks that will not melt, vaporize, or release hazardous emissions when subject to the fusing temperature of 392° Fahrenheit (200° Centigrade) for 0.1 second.

Paper Guidelines

Follow the paper specifications outlined in Table G-1 when selecting paper. Your paper supplier is familiar with the terms used in the table and should be able to provide you with paper that meets all the criteria. It is always a good idea to test any paper in your environment before purchasing large quantities.

Improper paper types Some types of paper may not perform well or may damage your printer. The following paper types should not be used:

- Paper which does not meet the weight specifications given in Table G-1
- Extremely smooth, shiny, or highly-textured paper
- Coated paper
- Letterhead or preprinted paper using low temperature dyes or thermography; these materials may transfer onto the fuser roller and cause damage. Any preprinted paper

Table G-1
Paper Specifications

Paper	**Specification**
Basis Weight	16 to 28 pound (60 to 135 gsm)
Grain	Long grain
Moisture	4% to 6% by weight
Furnish (Composition)	100% chemical wood pulp and/or
Acid Content	5.5 pH minimum
Ash Content	Not to exceed 10%
Opacity	85% minimum
Brightness	83% minimum
Caliper	3.0 to 7.0 mils
Curl	In ream: flat within 0.3 inch (8mm)
Cut Edge Conditions	Cut with sharp blades with no
Finishing	Cut sheet to +/- 0.031 inch of nominal, +/- 0.2° square
Fusing Compatibility	Must not scorch, melt, offset or release hazardous emissions when heated to 200° C (392° F) for 0.1
Packaging	Moisture-proof ream wrap
Smoothness	60 to 250 Sheffield (rougher surfaces tend to reduce image
Stiffness	1.6 to 7.5 machine direction/0.6 to 3.5 cross direction (Taber)
Surface	12 minimum wax pick (Dennison)
Electrical Properties	Surface Resistivity: 2.0 to 15 x 10^{10} ohms/sq. (conditioned at 23° C and 50% relative humidity) Volume Resistivity: 1.2 to 15 x

Labels

An adhesive label is paper with a pressure-sensitive adhesive backing. The three parts of label stock are the top or face sheet, the adhesive, and the liner or carrier sheet, referred to as the backing sheet. The parts of the label stock are described below:

- **Top or face sheet:** The top sheet is the surface that the image is printed on. It is usually composed of photocopy paper.
- **Carrier or Backing Sheet**: The backing sheet should be bleached sulfate stock and silicone-coated for easy release of the face sheet.
- **Adhesive**: The adhesive should be stable at the 392° F (200° C) temperatures encountered in the fusing process and must not give off any emissions that exceed exposure levels or threshold limits established by regional or national safety agencies.

  Adhesives should not come in direct contact with any part of the printer because the label stock may stick to the print drum or rollers, causing toner offset or paper jams. No adhesive should be exposed between the labels. To test label stock for adhesive exposure, press a sheet of plain paper against a sheet of label stock. The plain paper should not adhere to the label stock at all.
- **Label arrangement**: Labels must be arranged

F **Poorly manufactured labels**: Labels that show any indication of delamination, such as wrinkles or bubbles, should not be used.

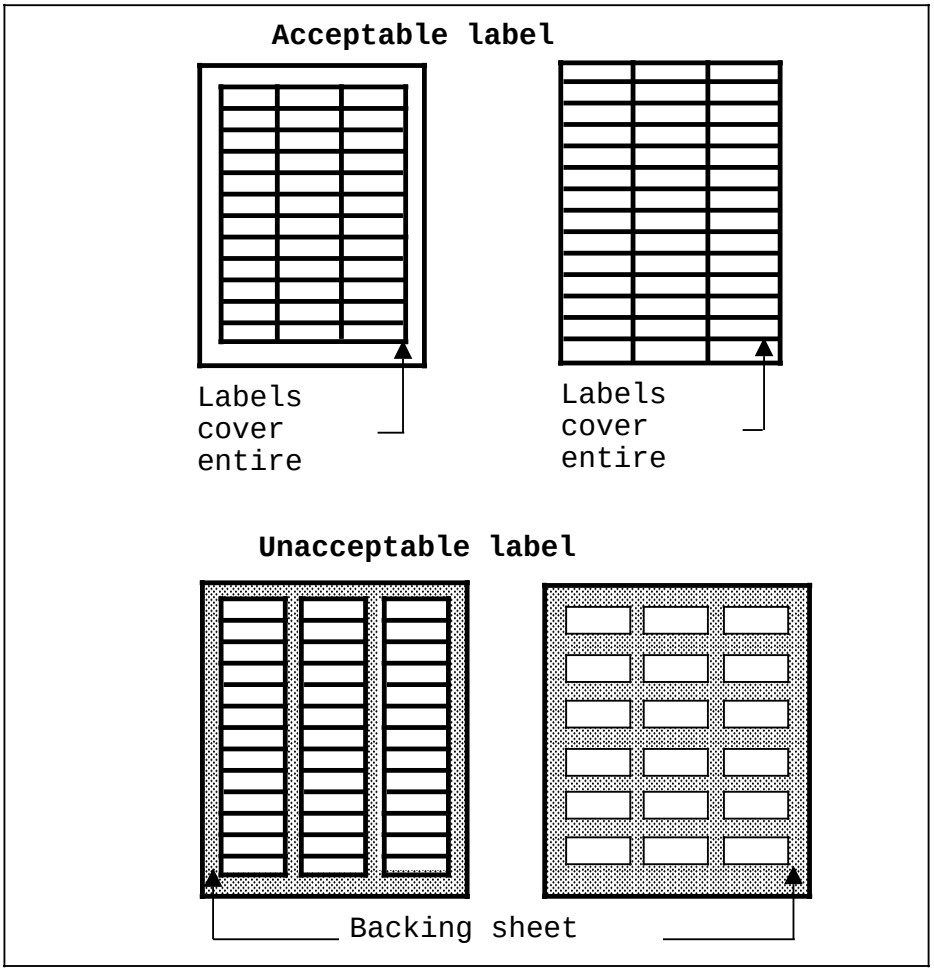

Figure G-1. Label Arrangements

Follow the paper specifications outlined in Table G-2 when selecting label stock.

Table G-2
Label Specifications

Label Properties	Specification
Face Sheet	Must meet specifications in
Fusing	All adhesives, liners, facestocks and other materials used in the label construction must be compatible with the heat and pressure of the fusing process. Materials must not discolor, melt, offset material
Construction	Total construction caliper must not exceed 0.0070 inches (0.18

Transparencies

Table G-3 summarizes the specifications to consider when selecting transparencies.

Table G-3
Transparencies Specifications

Transparencies Properties	Specification	
Thickness	0.110 mm	3.9 to 4.5 mils
Cutting Dimension	+/- 0.7 mm	0.031 inch
Cutting angle	90° +/- 0.2°	

PAPER STORAGE

How you store your paper once you receive it is an important aspect in the proper use of paper. Here are some suggestions:

- Store the paper in its own wrapper; do not leave it unwrapped or in a place where it can be affected by dampness or heat.
- Store the paper on a horizontal (level) surface. Do not place other objects on top of the paper.
- Store the paper in a closed cabinet.
- Always store the paper in a cool, dry place.
- Do not store paper on the floor. Cartons should be placed on shelves. Do not stack more than six cartons high.

NOTE: To reduce the effects of moisture on the paper in areas of high humidity, store any partially used reams of paper in plastic bags.

ENVELOPES

Paper properties are subject to change by paper manufacturers. Follow the guidelines below when selecting envelopes for use with your printer:

- Select envelopes that meet the specifications outlined in Table G-4.

- The Xerox supplies organization can help you select envelopes that are suitable for use with a laser printer.

Envelope Guidelines

Use thin, high quality envelopes for best results. Envelopes do not feed or image as well as other material because of folding and multiple layers of paper. Envelope manufacturers vary in the consistency and accuracy of the fold placement of their envelopes. Select envelopes of the quality and consistency you require.

Sizes Use only envelopes within the following sizes:

- Minimum: 3.82 by 7.43 inches (93 by 190.5 millimeters)
- Maximum: 6.28 by 9.4 inches (161 by 241.3 millimeters)

Envelope Construction An envelope with good construction has a leading edge that enters the

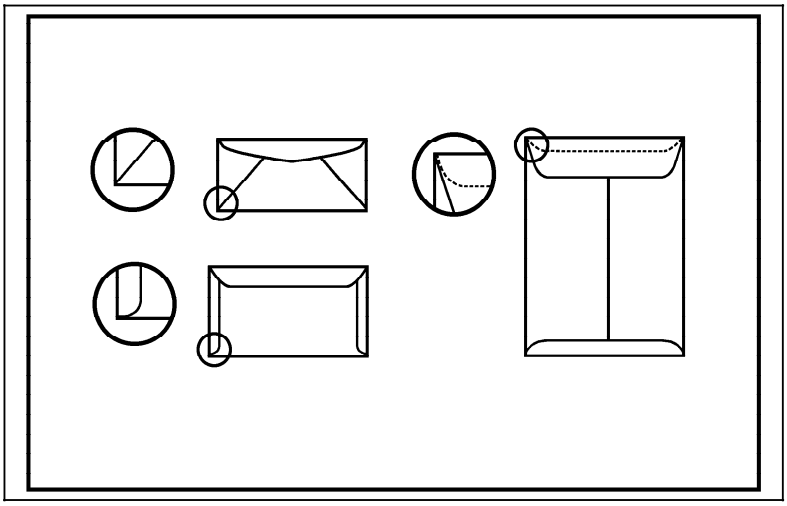

Figure G-2. Good Envelope Construction

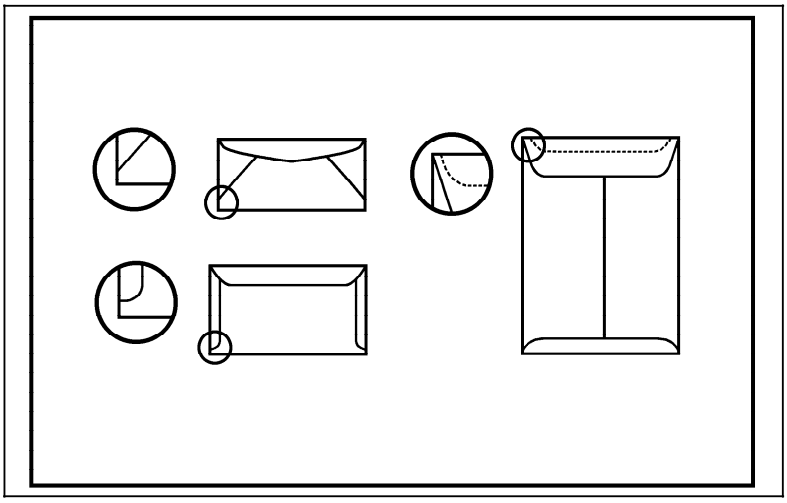

Figure G-3. Poor Envelope Construction

The adhesives used in envelopes should not scorch, melt, offset, or release hazardous emissions when heated to 392° F (200° C) for 0.1 second.

NOTE: The basis weight of the envelope paper should not exceed 24 pounds (90 gsm) or jamming may result. Envelopes should lie flat with less than 0.25 inch of curl, and not be

G **CAUTION:** Never use envelopes having clasps, snaps, windows, or synthetic materials. These items can cause

---

Do not use envelopes that have:

F Worn edges.

F Irregular shapes, curls or creases.

F Shiny or highly textured surfaces.

F Clasps.

F Folds that are not sharply creased.

F Embossed printing.

F Been previously printed by a laser printer.

Follow the specifications outlined in Table G-4 when selecting envelopes.

Table G-4
Envelope Specifications

Envelope	Specification
Paper	Envelope construction must meet all of the paper specifications
Composition	100% chemical wood pulp and/or cotton fiber
Basis Weight (single layer)	20 to 24 pound (17 x 22 inches per 500 sheets) (75 to 90 gsm)
Caliper	3.3 to 5.5 mils (0.084 to 0.14 mm) single layer thickness
Electrical	Surface resistivity: 2.0 to 15 x 1010 ohm/sq. Volume resistance: 1.2 to 15 x 1011 ohm-cm (conditioned at 23°
Fusing	All inks, adhesives, and other materials of the envelope must be compatible with the heat and pressure of the fusing process. Materials must not discolor, melt, offset material or release hazardous emissions
Finishing	Envelopes must not have any adhesive exposed to the printer. Each must be accurately folded (+/- 0.04 inch) so there are no more than two thicknesses of paper anywhere along the leading
Curl	Envelopes must lie flat with no more than 0.25 inch curl across
Moisture Content	4% to 6% by weight.
Smoothness	80 to 180 Sheffield

PCL 5 SYMBOL SETS

Table H-1
Roman-8 (ASCII + Roman Extension)

	0	1	2	3	4	5	6	7	8	9	A	B	C	D	E	F
0	NUL 0	DLE 16	SP 32	0 48	@ 64	P 80	‘ 96	p 112				¯ 176	â 192	Å 208	Á 224	þ 240
1	SOH 1	DC1 17	! 33	1 49	A 65	Q 81	a 97	q 113			À 161	Ý 177	ê 193	î 209	Ã 225	Þ 241
2	STX 2	DC2 18	" 34	2 50	B 66	R 82	b 98	r 114			Â 162	ý 178	Ô 194	Ø 210	ã 226	· 242
3	ETX 3	DC3 19	# 35	3 51	C 67	S 83	c 99	s 115			È 163	° 179	û 195	Æ 211	Ð 227	µ 243
4	EOT 4	DC4 20	$ 36	4 52	D 68	T 84	d 100	t 116			Ê 164	Ç 180	á 196	å 212	ð 228	¶ 244
5	ENQ 5	NAK 21	% 37	5 53	E 69	U 85	e 101	u 117			Ë 165	ç 181	é 197	í 213	Í 229	¾ 245
6	ACK 6	SYN 22	& 38	6 54	F 70	V 86	f 102	v 118			Î 166	Ñ 182	ó 198	ø 214	Ì 230	— 246
7	BEL 7	ETB 23	´ 39	7 55	G 71	W 87	g 103	w 119			Ï 167	ñ 183	ú 199	æ 215	Ó 231	¼ 247
8	BS 8	CAN 24	(40	8 56	H 72	X 88	h 104	x 120			´ 168	¡ 184	à 200	Ä 216	Ò 232	½ 248
9	HT 9	EM 25	) 41	9 57	I 73	Y 89	i 105	y 121			` 169	¿ 185	è 201	ì 217	Õ 233	ª 249
A	LF 10	SUB 26	* 42	: 58	J 74	Z 90	j 106	z 122			ˆ 170	¤ 186	ò 202	Ö 218	õ 234	º 250
B	VT 11	ESC 27	+ 43	; 59	K 75	[91	k 107	{ 123			¨ 171	£ 187	ù 203	Ü 219	Š 235	« 251
C	FF 12	FS 28	, 44	< 60	L 76	\ 92	l 108	| 124			˜ 172	¥ 188	ä 204	É 220	š 236	■ 252
D	CR 13	GS 29	– 45	= 61	M 77	] 93	m 109	} 125			Ù 173	§ 189	ë 205	ï 221	Ú 237	» 253
E	SO 14	RS 30	. 46	> 62	N 78	^ 94	n 110	~ 126			Û 174	ƒ 190	ö 206	ß 222	Ÿ 238	± 254
F	SI 15	US 31	/ 47	? 63	O 79	_ 95	o 111	▒ 127			£ 175	¢ 191	ü 207	Ô 223	ÿ 239	

Table H-2
PC-8

	0	1	2	3	4	5	6	7	8	9	A	B	C	D	E	F
0	NUL 0	▶ 16	SP 32	0 48	@ 64	P 80	` 96	p 112	Ç 128	É 144	á 160	⣿ 176	└ 192	╨ 208	α 224	≡ 240
1	☺ 1	◀ 17	! 33	1 49	A 65	Q 81	a 97	q 113	ü 129	æ 145	í 161	▒ 177	┴ 193	╤ 209	ß 225	± 241
2	☻ 2	↕ 18	" 34	2 50	B 66	R 82	b 98	r 114	é 130	Æ 146	ó 162	▓ 178	─ 194	═ 210	Γ 226	≥ 242
3	♥ 3	‼ 19	# 35	3 51	C 67	S 83	c 99	s 115	â 131	ô 147	ú 163	│ 179	├ 195	╙ 211	π 227	≤ 243
4	♦ 4	¶ 20	§ 36	4 52	D 68	T 84	d 100	t 116	ä 132	ö 148	ñ 164	┤ 180	─ 196	╘ 212	Σ 228	⌠ 244
5	♣ 5	§ 21	% 37	5 53	E 69	U 85	e 101	u 117	à 133	ò 149	Ñ 165	╡ 181	┼ 197	╒ 213	σ 229	⌡ 245
6	♠ 6	▬ 22	& 38	6 54	F 70	V 86	f 102	v 118	å 134	û 150	ª 166	╢ 182	╞ 198	╓ 214	µ 230	÷ 246
7	● 7	↨ 23	' 39	7 55	G 71	W 87	g 103	w 119	ç 135	ù 151	º 167	╖ 183	╟ 199	╫ 215	τ 231	≈ 247
8	◘ 8	↑ 24	(40	8 56	H 72	X 88	h 104	x 120	ê 136	ÿ 152	¿ 168	╕ 184	╚ 200	╪ 216	Φ 232	° 248
9	○ 9	↓ 25	) 41	9 57	I 73	Y 89	i 105	y 121	ë 137	Ö 153	⌐ 169	╣ 185	╔ 201	┘ 217	θ 233	· 249
A	◙ 10	→ 26	* 42	: 58	J 74	Z 90	j 106	z 122	è 138	Ü 154	¬ 170	║ 186	╩ 202	┌ 218	Ω 234	· 250
B	♂ 11	← 27	+ 43	; 59	K 75	[91	k 107	{ 123	ï 139	¢ 155	½ 171	╗ 187	╦ 203	█ 219	δ 235	√ 251
C	♀ 12	∟ 28	, 44	< 60	L 76	\ 92	l 108	| 124	î 140	£ 156	¼ 172	╝ 188	╠ 204	▄ 220	∞ 236	η 252
D	♪ 13	↔ 29	– 45	= 61	M 77	] 93	m 109	} 125	ì 141	¥ 157	¡ 173	╜ 189	═ 205	▌ 221	φ 237	² 253
E	♫ 14	▲ 30	. 46	> 62	N 78	^ 94	n 110	~ 126	Ä 142	₧ 158	« 174	╛ 190	╬ 206	▐ 222	∈ 238	■ 254
F	☼ 15	▼ 31	/ 47	? 63	O 79	_ 95	o 111	⌂ 127	Å 143	ƒ 159	» 175	┐ 191	╧ 207	▀ 223	∩ 239	255

Table H-3
PC-8 Danish/Norwegian

	0	1	2	3	4	5	6	7	8	9	A	B	C	D	E	F
0	NUL 0	► 16	SP 32	0 48	@ 64	P 80	` 96	p 112	Ç 128	É 144	á 160	⁞⁞⁞ 176	└ 192	╨ 208	α 224	≡ 240
1	☺ 1	◄ 17	! 33	1 49	A 65	Q 81	a 97	q 113	ü 129	æ 145	í 161	▒ 177	┴ 193	╤ 209	ß 225	± 241
2	☻ 2	↕ 18	" 34	2 50	B 66	R 82	b 98	r 114	é 130	Æ 146	ó 162	▓ 178	┬ 194	╥ 210	Γ 226	≥ 242
3	♥ 3	‼ 19	# 35	3 51	C 67	S 83	c 99	s 115	â 131	ô 147	ú 163	│ 179	├ 195	╙ 211	π 227	≤ 243
4	♦ 4	¶ 20	$ 36	4 52	D 68	T 84	d 100	t 116	ä 132	ö 148	ñ 164	┤ 180	─ 196	╘ 212	Σ 228	⌠ 244
5	♣ 5	§ 21	% 37	5 53	E 69	U 85	e 101	u 117	à 133	ò 149	Ñ 165	╡ 181	┼ 197	╒ 213	σ 229	⌡ 245
6	♠ 6	▬ 22	& 38	6 54	F 70	V 86	f 102	v 118	å 134	û 150	õ 166	╢ 182	╞ 198	╓ 214	µ 230	÷ 246
7	● 7	↨ 23	' 39	7 55	G 71	W 87	g 103	w 119	ç 135	ù 151	Õ 167	╖ 183	╟ 199	╫ 215	τ 231	≈ 247
8	◘ 8	↑ 24	(40	8 56	H 72	X 88	h 104	x 120	ê 136	y 152	¿ 168	╕ 184	╚ 200	╪ 216	Φ 232	° 248
9	○ 9	↓ 25	) 41	9 57	I 73	Y 89	i 105	y 121	ë 137	Ö 153	ã 169	╣ 185	╔ 201	┘ 217	Θ 233	∙ 249
A	◙ 10	→ 26	* 42	: 58	J 74	Z 90	j 106	z 122	è 138	Ü 154	Ã 170	║ 186	╩ 202	┌ 218	Ω 234	· 250
B	♂ 11	← 27	+ 43	; 59	K 75	[91	k 107	{ 123	ï 139	ø 155	ℓ 171	╗ 187	╦ 203	█ 219	δ 235	√ 251
C	♀ 12	∟ 28	, 44	< 60	L 76	\ 92	l 108	| 124	î 140	£ 156	ⁿ 172	╝ 188	╠ 204	▄ 220	∞ 236	η 252
D	♪ 13	↔ 29	– 45	= 61	M 77	] 93	m 109	} 125	ì 141	Ø 157	¡ 173	╜ 189	═ 205	▌ 221	∅ 237	² 253
E	♫ 14	▲ 30	. 46	> 62	N 78	^ 94	n 110	~ 126	Ä 142	L· 158	³ 174	╛ 190	╬ 206	▐ 222	∈ 238	■ 254
F	☼ 15	▼ 31	/ 47	? 63	O 79	_ 95	o 111	⌂ 127	Å 143	l· 159	¤ 175	┐ 191	╧ 207	▀ 223	∩ 239	255

Table H-4
PC-850

	0	1	2	3	4	5	6	7	8	9	A	B	C	D	E	F
0	NUL 0	► 16	SP 32	0 48	@ 64	P 80	` 96	p 112	Ç 128	É 144	á 160	⠿ 176	└ 192	ð 208	Ó 224	- 240
1	☺ 1	◄ 17	! 33	1 49	A 65	Q 81	a 97	q 113	ü 129	æ 145	í 161	▒ 177	┴ 193	Ð 209	ß 225	± 241
2	☻ 2	↕ 18	" 34	2 50	B 66	R 82	b 98	r 114	é 130	Æ 146	ó 162	▓ 178	┬ 194	Ê 210	Ô 226	‗ 242
3	♥ 3	‼ 19	# 35	3 51	C 67	S 83	c 99	s 115	â 131	ô 147	ú 163	│ 179	├ 195	Ë 211	Ò 227	¾ 243
4	♦ 4	¶ 20	$ 36	4 52	D 68	T 84	d 100	t 116	ä 132	ö 148	ñ 164	┤ 180	─ 196	È 212	õ 228	¶ 244
5	♣ 5	§ 21	% 37	5 53	E 69	U 85	e 101	u 117	à 133	ò 149	Ñ 165	Á 181	┼ 197	ı 213	Õ 229	§ 245
6	♠ 6	▬ 22	& 38	6 54	F 70	V 86	f 102	v 118	å 134	û 150	ª 166	Â 182	ã 198	Í 214	µ 230	÷ 246
7	● 7	↨ 23	' 39	7 55	G 71	W 87	g 103	w 119	ç 135	ù 151	º 167	À 183	Ã 199	Î 215	þ 231	¸ 247
8	◘ 8	↑ 24	(40	8 56	H 72	X 88	h 104	x 120	ê 136	ÿ 152	¿ 168	© 184	╚ 200	Ï 216	Þ 232	° 248
9	○ 9	↓ 25	) 41	9 57	I 73	Y 89	i 105	y 121	ë 137	Ö 153	® 169	╣ 185	╔ 201	┘ 217	Ú 233	¨ 249
A	◙ 10	→ 26	* 42	: 58	J 74	Z 90	j 106	z 122	è 138	Ü 154	¬ 170	║ 186	╩ 202	┌ 218	Û 234	· 250
B	♂ 11	← 27	+ 43	; 59	K 75	[91	k 107	{ 123	ï 139	ø 155	½ 171	╗ 187	╦ 203	█ 219	Ù 235	¹ 251
C	♀ 12	∟ 28	, 44	< 60	L 76	\ 92	l 108	| 124	î 140	£ 156	¼ 172	╝ 188	╠ 204	▄ 220	ý 236	³ 252
D	♪ 13	↔ 29	– 45	= 61	M 77	] 93	m 109	} 125	ì 141	Ø 157	¡ 173	¢ 189	═ 205	▌ 221	Ý 237	² 253
E	♫ 14	▲ 30	. 46	> 62	N 78	^ 94	n 110	~ 126	Ä 142	× 158	« 174	¥ 190	╬ 206	Ì 222	¯ 238	■ 254
F	☼ 15	▼ 31	/ 47	? 63	O 79	_ 95	o 111	⌂ 127	Å 143	ƒ 159	» 175	╖ 191	¤ 207	▀ 223	´ 239	

Table H-5
ISO 8859 (ECMA-94 Latin 1)

	0	1	2	3	4	5	6	7	8	9	A	B	C	D	E	F
0	NUL 0	DLE 16	SP 32	0 48	@ 64	P 80	` 96	p 112				° 176	À 192	Ð 208	à 224	ð 240
1	SOH 1	DC1 17	! 33	1 49	A 65	Q 81	a 97	q 113			¡ 161	± 177	Á 193	Ñ 209	á 225	ñ 241
2	STX 2	DC2 18	" 34	2 50	B 66	R 82	b 98	r 114			¢ 162	² 178	Â 194	Ò 210	â 226	ò 242
3	ETX 3	DC3 19	# 35	3 51	C 67	S 83	c 99	s 115			£ 163	³ 179	Ã 195	Ó 211	ã 227	ó 243
4	EOT 4	DC4 20	$ 36	4 52	D 68	T 84	d 100	t 116			¤ 164	´ 180	Ä 196	Ô 212	ä 228	ô 244
5	ENQ 5	NAK 21	% 37	5 53	E 69	U 85	e 101	u 117			¥ 165	µ 181	Å 197	Õ 213	å 229	õ 245
6	ACK 6	SYN 22	& 38	6 54	F 70	V 86	f 102	v 118			¦ 166	¶ 182	Æ 198	Ö 214	æ 230	ö 246
7	BEL 7	ETB 23	' 39	7 55	G 71	W 87	g 103	w 119			§ 167	· 183	Ç 199	× 215	ç 231	÷ 247
8	BS 8	CAN 24	(40	8 56	H 72	X 88	h 104	x 120			¨ 168	¸ 184	È 200	Ø 216	è 232	ø 248
9	HT 9	EM 25	) 41	9 57	I 73	Y 89	i 105	y 121			© 169	¹ 185	É 201	Ù 217	é 233	ù 249
A	LF 10	SUB 26	* 42	: 58	J 74	Z 90	j 106	z 122			ª 170	º 186	Ê 202	Ú 218	ê 234	ú 250
B	VT 11	ESC 27	+ 43	; 59	K 75	[91	k 107	{ 123			« 171	» 187	Ë 203	Û 219	ë 235	û 251
C	FF 12	FS 28	, 44	< 60	L 76	\ 92	l 108	| 124			¬ 172	¼ 188	Ì 204	Ü 220	ì 236	ü 252
D	CR 13	GS 29	− 45	= 61	M 77	] 93	m 109	} 125			− 173	½ 189	Í 205	Ý 221	í 237	ý 253
E	SO 14	RS 30	. 46	> 62	N 78	^ 94	n 110	~ 126			® 174	¾ 190	Î 206	Þ 222	î 238	þ 254
F	SI 15	US 31	/ 47	? 63	O 79	_ 95	o 111	▒ 127			¯ 175	¿ 191	Ï 207	ß 223	ï 239	ÿ 255

Table H-6
ISO 2 International Reference Version

	0	1	2	3	4	5	6	7	8	9	A	B	C	D	E	F
0	NUL 0	DLE 16	SP 32	0 48	@ 64	P 80	` 96	p 112								
1	SOH 1	DC1 17	! 33	1 49	A 65	Q 81	a 97	q 113								
2	STX 2	DC2 18	" 34	2 50	B 66	R 82	b 98	r 114								
3	ETX 3	DC3 19	# 35	3 51	C 67	S 83	c 99	s 115								
4	EOT 4	DC4 20	¤ 36	4 52	D 68	T 84	d 100	t 116								
5	ENQ 5	NAK 21	% 37	5 53	E 69	U 85	e 101	u 117								
6	ACK 6	SYN 22	& 38	6 54	F 70	V 86	f 102	v 118								
7	BEL 7	ETB 23	´ 39	7 55	G 71	W 87	g 103	w 119								
8	BS 8	CAN 24	(40	8 56	H 72	X 88	h 104	x 120								
9	HT 9	EM 25	) 41	9 57	I 73	Y 89	i 105	y 121								
A	LF 10	SUB 26	* 42	: 58	J 74	Z 90	j 106	z 122								
B	VT 11	ESC 27	+ 43	; 59	K 75	[91	k 107	{ 123								
C	FF 12	FS 28	, 44	< 60	L 76	\ 92	l 108	| 124								
D	CR 13	GS 29	– 45	= 61	M 77	] 93	m 109	} 125								
E	SO 14	RS 30	. 46	> 62	N 78	^ 94	n 110	‾ 126								
F	SI 15	US 31	/ 47	? 63	O 79	_ 95	o 111	▒ 127								

Table H-7
ISO 4 UK

	0	1	2	3	4	5	6	7	8	9	A	B	C	D	E	F
0	NUL 0	DLE 16	SP 32	0 48	@ 64	P 80	` 96	p 112								
1	SOH 1	DC1 17	! 33	1 49	A 65	Q 81	a 97	q 113								
2	STX 2	DC2 18	" 34	2 50	B 66	R 82	b 98	r 114								
3	ETX 3	DC3 19	£ 35	3 51	C 67	S 83	c 99	s 115								
4	EOT 4	DC4 20	$ 36	4 52	D 68	T 84	d 100	t 116								
5	ENQ 5	NAK 21	% 37	5 53	E 69	U 85	e 101	u 117								
6	ACK 6	SYN 22	& 38	6 54	F 70	V 86	f 102	v 118								
7	BEL 7	ETB 23	' 39	7 55	G 71	W 87	g 103	w 119								
8	BS 8	CAN 24	(40	8 56	H 72	X 88	h 104	x 120								
9	HT 9	EM 25	) 41	9 57	I 73	Y 89	i 105	y 121								
A	LF 10	SUB 26	* 42	: 58	J 74	Z 90	j 106	z 122								
B	VT 11	ESC 27	+ 43	; 59	K 75	[91	k 107	{ 123								
C	FF 12	FS 28	, 44	< 60	L 76	\ 92	l 108	| 124								
D	CR 13	GS 29	– 45	= 61	M 77	] 93	m 109	} 125								
E	SO 14	RS 30	. 46	> 62	N 78	^ 94	n 110	~ 126								
F	SI 15	US 31	/ 47	? 63	O 79	_ 95	o 111	▒ 127								

Table H-8
ISO 6 ASCII

	0	1	2	3	4	5	6	7	8	9	A	B	C	D	E	F
0	NUL 0	DLE 16	SP 32	0 48	@ 64	P 80	` 96	p 112								
1	SOH 1	DC1 17	! 33	1 49	A 65	Q 81	a 97	q 113								
2	STX 2	DC2 18	" 34	2 50	B 66	R 82	b 98	r 114								
3	ETX 3	DC3 19	# 35	3 51	C 67	S 83	c 99	s 115								
4	EOT 4	DC4 20	$ 36	4 52	D 68	T 84	d 100	t 116								
5	ENQ 5	NAK 21	% 37	5 53	E 69	U 85	e 101	u 117								
6	ACK 6	SYN 22	& 38	6 54	F 70	V 86	f 102	v 118								
7	BEL 7	ETB 23	´ 39	7 55	G 71	W 87	g 103	w 119								
8	BS 8	CAN 24	(40	8 56	H 72	X 88	h 104	x 120								
9	HT 9	EM 25	) 41	9 57	I 73	Y 89	i 105	y 121								
A	LF 10	SUB 26	* 42	: 58	J 74	Z 90	j 106	z 122								
B	VT 11	ESC 27	+ 43	; 59	K 75	[91	k 107	{ 123								
C	FF 12	FS 28	, 44	< 60	L 76	\ 92	l 108	| 124								
D	CR 13	GS 29	– 45	= 61	M 77	] 93	m 109	} 125								
E	SO 14	RS 30	. 46	> 62	N 78	^ 94	n 110	~ 126								
F	SI 15	US 31	/ 47	? 63	O 79	_ 95	o 111	▒ 127								

Table H-9
ISO 10 Swedish

	0	1	2	3	4	5	6	7	8	9	A	B	C	D	E	F
0	NUL 0	DLE 16	SP 32	0 48	@ 64	P 80	` 96	p 112								
1	SOH 1	DC1 17	! 33	1 49	A 65	Q 81	a 97	q 113								
2	STX 2	DC2 18	" 34	2 50	B 66	R 82	b 98	r 114								
3	ETX 3	DC3 19	# 35	3 51	C 67	S 83	c 99	s 115								
4	EOT 4	DC4 20	¤ 36	4 52	D 68	T 84	d 100	t 116								
5	ENQ 5	NAK 21	% 37	5 53	E 69	U 85	e 101	u 117								
6	ACK 6	SYN 22	& 38	6 54	F 70	V 86	f 102	v 118								
7	BEL 7	ETB 23	´ 39	7 55	G 71	W 87	g 103	w 119								
8	BS 8	CAN 24	(40	8 56	H 72	X 88	h 104	x 120								
9	HT 9	EM 25	) 41	9 57	I 73	Y 89	i 105	y 121								
A	LF 10	SUB 26	* 42	: 58	J 74	Z 90	j 106	z 122								
B	VT 11	ESC 27	+ 43	; 59	K 75	Ä 91	k 107	ä 123								
C	FF 12	FS 28	, 44	< 60	L 76	Ö 92	l 108	ö 124								
D	CR 13	GS 29	– 45	= 61	M 77	Å 93	m 109	å 125								
E	SO 14	RS 30	. 46	> 62	N 78	^ 94	n 110	‾ 126								
F	SI 15	US 31	/ 47	? 63	O 79	_ 95	o 111	▒ 127								

Table H-10
ISO 11 Swedish

	0	1	2	3	4	5	6	7	8	9	A	B	C	D	E	F
0	NUL 0	DLE 16	SP 32	0 48	É 64	P 80	é 96	p 112								
1	SOH 1	DC1 17	! 33	1 49	A 65	Q 81	a 97	q 113								
2	STX 2	DC2 18	" 34	2 50	B 66	R 82	b 98	r 114								
3	ETX 3	DC3 19	# 35	3 51	C 67	S 83	c 99	s 115								
4	EOT 4	DC4 20	¤ 36	4 52	D 68	T 84	d 100	t 116								
5	ENQ 5	NAK 21	% 37	5 53	E 69	U 85	e 101	u 117								
6	ACK 6	SYN 22	& 38	6 54	F 70	V 86	f 102	v 118								
7	BEL 7	ETB 23	´ 39	7 55	G 71	W 87	g 103	w 119								
8	BS 8	CAN 24	(40	8 56	H 72	X 88	h 104	x 120								
9	HT 9	EM 25	) 41	9 57	I 73	Y 89	i 105	y 121								
A	LF 10	SUB 26	* 42	: 58	J 74	Z 90	j 106	z 122								
B	VT 11	ESC 27	+ 43	; 59	K 75	Ä 91	k 107	ä 123								
C	FF 12	FS 28	, 44	< 60	L 76	Ö 92	l 108	ö 124								
D	CR 13	GS 29	– 45	= 61	M 77	Å 93	m 109	å 125								
E	SO 14	RS 30	. 46	> 62	N 78	Ü 94	n 110	ü 126								
F	SI 15	US 31	/ 47	? 63	O 79	_ 95	o 111	▒ 127								

Table H-11
ISO 14 JIS ASCII

	0	1	2	3	4	5	6	7	8	9	A	B	C	D	E	F
0	NUL 0	DLE 16	SP 32	0 48	@ 64	P 80	` 96	p 112								
1	SOH 1	DC1 17	! 33	1 49	A 65	Q 81	a 97	q 113								
2	STX 2	DC2 18	" 34	2 50	B 66	R 82	b 98	r 114								
3	ETX	DC3	#	3	C	S	c	s								

Table H-12
ISO 15 Italian

	0	1	2	3	4	5	6	7	8	9	A	B	C	D	E	F
0	NUL 0	DLE 16	SP 32	0 48	§ 64	P 80	ù 96	p 112								
1	SOH 1	DC1 17	! 33	1 49	A 65	Q 81	a 97	q 113								
2	STX 2	DC2 18	" 34	2 50	B 66	R 82	b 98	r 114								
3	ETX 3	DC3 19	£ 35	3 51	C 67	S 83	c 99	s 115								
4	EOT 4	DC4 20	$ 36	4 52	D 68	T 84	d 100	t 116								
5	ENQ 5	NAK 21	% 37	5 53	E 69	U 85	e 101	u 117								
6	ACK 6	SYN 22	& 38	6 54	F 70	V 86	f 102	v 118								
7	BEL 7	ETB 23	´ 39	7 55	G 71	W 87	g 103	w 119								
8	BS 8	CAN 24	(40	8 56	H 72	X 88	h 104	x 120								
9	HT 9	EM 25	) 41	9 57	I 73	Y 89	i 105	y 121								
A	LF 10	SUB 26	* 42	: 58	J 74	Z 90	j 106	z 122								
B	VT 11	ESC 27	+ 43	; 59	K 75	° 91	k 107	à 123								
C	FF 12	FS 28	, 44	< 60	L 76	ç 92	l 108	ò 124								
D	CR 13	GS 29	– 45	= 61	M 77	é 93	m 109	è 125								
E	SO 14	RS 30	. 46	> 62	N 78	^ 94	n 110	ì 126								
F	SI 15	US 31	/ 47	? 63	O 79	_ 95	o 111	▒ 127								

Table H-13
ISO 16 Portuguese

	0	1	2	3	4	5	6	7	8	9	A	B	C	D	E	F
0	NUL 0	DLE 16	SP 32	0 48	§ 64	P 80	` 96	p 112								
1	SOH 1	DC1 17	! 33	1 49	A 65	Q 81	a 97	q 113								
2	STX 2	DC2 18	" 34	2 50	B 66	R 82	b 98	r 114								
3	ETX 3	DC3 19	# 35	3 51	C 67	S 83	c 99	s 115								
4	EOT 4	DC4 20	$ 36	4 52	D 68	T 84	d 100	t 116								
5	ENQ 5	NAK 21	% 37	5 53	E 69	U 85	e 101	u 117								
6	ACK 6	SYN 22	& 38	6 54	F 70	V 86	f 102	v 118								
7	BEL 7	ETB 23	´ 39	7 55	G 71	W 87	g 103	w 119								
8	BS 8	CAN 24	(40	8 56	H 72	X 88	h 104	x 120								
9	HT 9	EM 25	) 41	9 57	I 73	Y 89	i 105	y 121								
A	LF 10	SUB 26	* 42	: 58	J 74	Z 90	j 106	z 122								
B	VT 11	ESC 27	+ 43	; 59	K 75	Ã 91	k 107	ã 123								
C	FF 12	FS 28	, 44	< 60	L 76	Ç 92	l 108	ç 124								
D	CR 13	GS 29	– 45	= 61	M 77	Õ 93	m 109	õ 125								
E	SO 14	RS 30	. 46	> 62	N 78	^ 94	n 110	° 126								
F	SI 15	US 31	/ 47	? 63	O 79	_ 95	o 111	▒ 127								

Table H-14
ISO 17 Spanish

	0	1	2	3	4	5	6	7	8	9	A	B	C	D	E	F
0	NUL 0	DLE 16	SP 32	0 48	§ 64	P 80	` 96	p 112								
1	SOH 1	DC1 17	! 33	1 49	A 65	Q 81	a 97	q 113								
2	STX 2	DC2 18	" 34	2 50	B 66	R 82	b 98	r 114								
3	ETX 3	DC3 19	£ 35	3 51	C 67	S 83	c 99	s 115								
4	EOT 4	DC4 20	$ 36	4 52	D 68	T 84	d 100	t 116								
5	ENQ 5	NAK 21	% 37	5 53	E 69	U 85	e 101	u 117								
6	ACK 6	SYN 22	& 38	6 54	F 70	V 86	f 102	v 118								
7	BEL 7	ETB 23	´ 39	7 55	G 71	W 87	g 103	w 119								
8	BS 8	CAN 24	(40	8 56	H 72	X 88	h 104	x 120								
9	HT 9	EM 25	) 41	9 57	I 73	Y 89	i 105	y 121								
A	LF 10	SUB 26	* 42	: 58	J 74	Z 90	j 106	z 122								
B	VT 11	ESC 27	+ 43	; 59	K 75	¡ 91	k 107	º 123								
C	FF 12	FS 28	, 44	< 60	L 76	Ñ 92	l 108	ñ 124								
D	CR 13	GS 29	– 45	= 61	M 77	¿ 93	m 109	ç 125								
E	SO 14	RS 30	. 46	> 62	N 78	^ 94	n 110	~ 126								
F	SI 15	US 31	/ 47	? 63	O 79	_ 95	o 111	▒ 127								

Table H-15
ISO 21 German

	0	1	2	3	4	5	6	7	8	9	A	B	C	D	E	F
0	NUL 0	DLE 16	SP 32	0 48	§ 64	P 80	` 96	p 112								
1	SOH 1	DC1 17	! 33	1 49	A 65	Q 81	a 97	q 113								
2	STX 2	DC2 18	" 34	2 50	B 66	R 82	b 98	r 114								
3	ETX 3	DC3 19	# 35	3 51	C 67	S 83	c 99	s 115								
4	EOT 4	DC4 20	$ 36	4 52	D 68	T 84	d 100	t 116								
5	ENQ 5	NAK 21	% 37	5 53	E 69	U 85	e 101	u 117								
6	ACK 6	SYN 22	& 38	6 54	F 70	V 86	f 102	v 118								
7	BEL 7	ETB 23	´ 39	7 55	G 71	W 87	g 103	w 119								
8	BS 8	CAN 24	(40	8 56	H 72	X 88	h 104	x 120								
9	HT 9	EM 25	) 41	9 57	I 73	Y 89	i 105	y 121								
A	LF 10	SUB 26	* 42	: 58	J 74	Z 90	j 106	z 122								
B	VT 11	ESC 27	+ 43	; 59	K 75	Ä 91	k 107	ä 123								
C	FF 12	FS 28	, 44	< 60	L 76	Ö 92	l 108	ö 124								
D	CR 13	GS 29	– 45	= 61	M 77	Ü 93	m 109	ü 125								
E	SO 14	RS 30	. 46	> 62	N 78	^ 94	n 110	ß 126								
F	SI 15	US 31	/ 47	? 63	O 79	_ 95	o 111	▒ 127								

Table H-16
ISO 25 French

	0	1	2	3	4	5	6	7	8	9	A	B	C	D	E	F
0	NUL 0	DLE 16	SP 32	0 48	à 64	P 80	` 96	p 112								
1	SOH 1	DC1 17	! 33	1 49	A 65	Q 81	a 97	q 113								
2	STX 2	DC2 18	" 34	2 50	B 66	R 82	b 98	r 114								
3	ETX 3	DC3 19	£ 35	3 51	C 67	S 83	c 99	s 115								
4	EOT 4	DC4 20	$ 36	4 52	D 68	T 84	d 100	t 116								
5	ENQ 5	NAK 21	% 37	5 53	E 69	U 85	e 101	u 117								
6	ACK 6	SYN 22	& 38	6 54	F 70	V 86	f 102	v 118								
7	BEL 7	ETB 23	´ 39	7 55	G 71	W 87	g 103	w 119								
8	BS 8	CAN 24	(40	8 56	H 72	X 88	h 104	x 120								
9	HT 9	EM 25	) 41	9 57	I 73	Y 89	i 105	y 121								
A	LF 10	SUB 26	* 42	: 58	J 74	Z 90	j 106	z 122								
B	VT 11	ESC 27	+ 43	; 59	K 75	° 91	k 107	é 123								
C	FF 12	FS 28	, 44	< 60	L 76	ç 92	l 108	ù 124								
D	CR 13	GS 29	– 45	= 61	M 77	§ 93	m 109	è 125								
E	SO 14	RS 30	. 46	> 62	N 78	^ 94	n 110	¨ 126								
F	SI 15	US 31	/ 47	? 63	O 79	_ 95	o 111	▒ 127								

Table H-17
ISO 57 Chinese

	0	1	2	3	4	5	6	7	8	9	A	B	C	D	E	F
0	NUL 0	DLE 16	SP 32	0 48	@ 64	P 80	` 96	p 112								
1	SOH 1	DC1 17	! 33	1 49	A 65	Q 81	a 97	q 113								
2	STX 2	DC2 18	" 34	2 50	B 66	R 82	b 98	r 114								
3	ETX 3	DC3 19	# 35	3 51	C 67	S 83	c 99	s 115								
4	EOT 4	DC4 20	¥ 36	4 52	D 68	T 84	d 100	t 116								
5	ENQ 5	NAK 21	% 37	5 53	E 69	U 85	e 101	u 117								
6	ACK 6	SYN 22	& 38	6 54	F 70	V 86	f 102	v 118								
7	BEL 7	ETB 23	´ 39	7 55	G 71	W 87	g 103	w 119								
8	BS 8	CAN 24	(40	8 56	H 72	X 88	h 104	x 120								
9	HT 9	EM 25	) 41	9 57	I 73	Y 89	i 105	y 121								
A	LF 10	SUB 26	* 42	: 58	J 74	Z 90	j 106	z 122								
B	VT 11	ESC 27	+ 43	; 59	K 75	[91	k 107	{ 123								
C	FF 12	FS 28	, 44	< 60	L 76	\ 92	l 108	| 124								
D	CR 13	GS 29	– 45	= 61	M 77	] 93	m 109	} 125								
E	SO 14	RS 30	. 46	> 62	N 78	^ 94	n 110	‾ 126								
F	SI 15	US 31	/ 47	? 63	O 79	_ 95	o 111	▒ 127								

Table H-18
ISO 60 Norwegian

	0	1	2	3	4	5	6	7	8	9	A	B	C	D	E	F
0	NUL 0	DLE 16	SP 32	0 48	@ 64	P 80	` 96	p 112								
1	SOH 1	DC1 17	! 33	1 49	A 65	Q 81	a 97	q 113								
2	STX 2	DC2 18	" 34	2 50	B 66	R 82	b 98	r 114								
3	ETX 3	DC3 19	# 35	3 51	C 67	S 83	c 99	s 115								
4	EOT 4	DC4 20	Ş 36	4 52	D 68	T 84	d 100	t 116								
5	ENQ 5	NAK 21	% 37	5 53	E 69	U 85	e 101	u 117								
6	ACK 6	SYN 22	& 38	6 54	F 70	V 86	f 102	v 118								
7	BEL 7	ETB 23	´ 39	7 55	G 71	W 87	g 103	w 119								
8	BS 8	CAN 24	(40	8 56	H 72	X 88	h 104	x 120								
9	HT 9	EM 25	) 41	9 57	I 73	Y 89	i 105	y 121								
A	LF 10	SUB 26	* 42	: 58	J 74	Z 90	j 106	z 122								
B	VT 11	ESC 27	+ 43	; 59	K 75	Æ 91	k 107	æ 123								
C	FF 12	FS 28	, 44	< 60	L 76	Ø 92	l 108	ø 124								
D	CR 13	GS 29	– 45	= 61	M 77	Å 93	m 109	å 125								
E	SO 14	RS 30	. 46	> 62	N 78	^ 94	n 110	~ 126								
F	SI 15	US 31	/ 47	? 63	O 79	_ 95	o 111	▒ 127								

Table H-19
ISO 61 Norwegian 2

	0	1	2	3	4	5	6	7	8	9	A	B	C	D	E	F
0	NUL 0	DLE 16	SP 32	0 48	@ 64	P 80	` 96	p 112								
1	SOH 1	DC1 17	! 33	1 49	A 65	Q 81	a 97	q 113								
2	STX 2	DC2 18	" 34	2 50	B 66	R 82	b 98	r 114								
3	ETX 3	DC3 19	§ 35	3 51	C 67	S 83	c 99	s 115								
4	EOT 4	DC4 20	$ 36	4 52	D 68	T 84	d 100	t 116								
5	ENQ 5	NAK 21	% 37	5 53	E 69	U 85	e 101	u 117								
6	ACK 6	SYN 22	& 38	6 54	F 70	V 86	f 102	v 118								
7	BEL 7	ETB 23	´ 39	7 55	G 71	W 87	g 103	w 119								
8	BS 8	CAN 24	(40	8 56	H 72	X 88	h 104	x 120								
9	HT 9	EM 25	) 41	9 57	I 73	Y 89	i 105	y 121								
A	LF 10	SUB 26	* 42	: 58	J 74	Z 90	j 106	z 122								
B	VT 11	ESC 27	+ 43	; 59	K 75	Æ 91	k 107	æ 123								
C	FF 12	FS 28	, 44	< 60	L 76	Ø 92	l 108	ø 124								
D	CR 13	GS 29	– 45	= 61	M 77	Å 93	m 109	å 125								
E	SO 14	RS 30	. 46	> 62	N 78	^ 94	n 110	| 126								
F	SI 15	US 31	/ 47	? 63	O 79	_ 95	o 111	▒ 127								

Table H-20
ISO 69 French

	0	1	2	3	4	5	6	7	8	9	A	B	C	D	E	F
0	NUL 0	DLE 16	SP 32	0 48	à 64	P 80	µ 96	p 112								
1	SOH 1	DC1 17	! 33	1 49	A 65	Q 81	a 97	q 113								
2	STX 2	DC2 18	" 34	2 50	B 66	R 82	b 98	r 114								
3	ETX 3	DC3 19	£ 35	3 51	C 67	S 83	c 99	s 115								
4	EOT 4	DC4 20	$ 36	4 52	D 68	T 84	d 100	t 116								
5	ENQ 5	NAK 21	% 37	5 53	E 69	U 85	e 101	u 117								
6	ACK 6	SYN 22	& 38	6 54	F 70	V 86	f 102	v 118								
7	BEL 7	ETB 23	´ 39	7 55	G 71	W 87	g 103	w 119								
8	BS 8	CAN 24	(40	8 56	H 72	X 88	h 104	x 120								
9	HT 9	EM 25	) 41	9 57	I 73	Y 89	i 105	y 121								
A	LF 10	SUB 26	* 42	: 58	J 74	Z 90	j 106	z 122								
B	VT 11	ESC 27	+ 43	; 59	K 75	° 91	k 107	é 123								
C	FF 12	FS 28	, 44	< 60	L 76	ç 92	l 108	ù 124								
D	CR 13	GS 29	– 45	= 61	M 77	§ 93	m 109	è 125								
E	SO 14	RS 30	. 46	> 62	N 78	^ 94	n 110	¨ 126								
F	SI 15	US 31	/ 47	? 63	O 79	_ 95	o 111	▒ 127								

Table H-21
ISO 84 Portuguese

	0	1	2	3	4	5	6	7	8	9	A	B	C	D	E	F
0	NUL 0	DLE 16	SP 32	0 48	´ 64	P 80	` 96	p 112								
1	SOH 1	DC1 17	! 33	1 49	A 65	Q 81	a 97	q 113								
2	STX 2	DC2 18	" 34	2 50	B 66	R 82	b 98	r 114								
3	ETX 3	DC3 19	# 35	3 51	C 67	S 83	c 99	s 115								
4	EOT 4	DC4 20	$ 36	4 52	D 68	T 84	d 100	t 116								
5	ENQ 5	NAK 21	% 37	5 53	E 69	U 85	e 101	u 117								
6	ACK 6	SYN 22	& 38	6 54	F 70	V 86	f 102	v 118								
7	BEL 7	ETB 23	´ 39	7 55	G 71	W 87	g 103	w 119								
8	BS 8	CAN 24	(40	8 56	H 72	X 88	h 104	x 120								
9	HT 9	EM 25	) 41	9 57	I 73	Y 89	i 105	y 121								
A	LF 10	SUB 26	* 42	: 58	J 74	Z 90	j 106	z 122								
B	VT 11	ESC 27	+ 43	; 59	K 75	Ã 91	k 107	ã 123								
C	FF 12	FS 28	, 44	< 60	L 76	Ç 92	l 108	ç 124								
D	CR 13	GS 29	– 45	= 61	M 77	Õ 93	m 109	õ 125								
E	SO 14	RS 30	. 46	> 62	N 78	^ 94	n 110	~ 126								
F	SI 15	US 31	/ 47	? 63	O 79	_ 95	o 111	▒ 127								

Table H-22
ISO 85 Spanish

	0	1	2	3	4	5	6	7	8	9	A	B	C	D	E	F
0	NUL 0	DLE 16	SP 32	0 48	· 64	P 80	` 96	p 112								
1	SOH 1	DC1 17	! 33	1 49	A 65	Q 81	a 97	q 113								
2	STX 2	DC2 18	" 34	2 50	B 66	R 82	b 98	r 114								
3	ETX 3	DC3 19	# 35	3 51	C 67	S 83	c 99	s 115								
4	EOT 4	DC4 20	$ 36	4 52	D 68	T 84	d 100	t 116								
5	ENQ 5	NAK 21	% 37	5 53	E 69	U 85	e 101	u 117								
6	ACK 6	SYN 22	& 38	6 54	F 70	V 86	f 102	v 118								
7	BEL 7	ETB 23	´ 39	7 55	G 71	W 87	g 103	w 119								
8	BS 8	CAN 24	(40	8 56	H 72	X 88	h 104	x 120								
9	HT 9	EM 25	) 41	9 57	I 73	Y 89	i 105	y 121								
A	LF 10	SUB 26	* 42	: 58	J 74	Z 90	j 106	z 122								
B	VT 11	ESC 27	+ 43	; 59	K 75	¡ 91	k 107	´ 123								
C	FF 12	FS 28	, 44	< 60	L 76	Ñ 92	l 108	ñ 124								
D	CR 13	GS 29	– 45	= 61	M 77	Ç 93	m 109	ç 125								
E	SO 14	RS 30	. 46	> 62	N 78	¿ 94	n 110	¨ 126								
F	SI 15	US 31	/ 47	? 63	O 79	_ 95	o 111	▒ 127								

Table H-23
Legal

	0	1	2	3	4	5	6	7	8	9	A	B	C	D	E	F
0	NUL 0	DLE 16	SP 32	0 48	@ 64	P 80	° 96	p 112								
1	SOH 1	DC1 17	! 33	1 49	A 65	Q 81	a 97	q 113								
2	STX 2	DC2 18	" 34	2 50	B 66	R 82	b 98	r 114								
3	ETX 3	DC3 19	# 35	3 51	C 67	S 83	c 99	s 115								
4	EOT 4	DC4 20	$ 36	4 52	D 68	T 84	d 100	t 116								
5	ENQ 5	NAK 21	% 37	5 53	E 69	U 85	e 101	u 117								
6	ACK 6	SYN 22	& 38	6 54	F 70	V 86	f 102	v 118								
7	BEL 7	ETB 23	' 39	7 55	G 71	W 87	g 103	w 119								
8	BS 8	CAN 24	(40	8 56	H 72	X 88	h 104	x 120								
9	HT 9	EM 25	) 41	9 57	I 73	Y 89	i 105	y 121								
A	LF 10	SUB 26	* 42	: 58	J 74	Z 90	j 106	z 122								
B	VT 11	ESC 27	+ 43	; 59	K 75	[91	k 107	§ 123								
C	FF 12	FS 28	, 44	= 60	L 76	® 92	l 108	¶ 124								
D	CR 13	GS 29	- 45	= 61	M 77	] 93	m 109	† 125								
E	SO 14	RS 30	. 46	¢ 62	N 78	© 94	n 110	™ 126								
F	SI 15	US 31	/ 47	? 63	O 79	_ 95	o 111	▒ 127								

Table H-24
Ventura Math

	0	1	2	3	4	5	6	7	8	9	A	B	C	D	E	F
0	NUL 0	DLE 16	SP 32	0 48	= 64	Π 80	— 96	π 112			⌃ 160	® 176	≥ 192	↓ 208	⌡ 224	∏ 240
1	SOH 1	DC1 17	! 33	1 49	A 65	Θ 81	α 97	θ 113			✓ 161	⊃ 177	♦ 193	← 209	· 225	TM 241
2	STX 2	DC2 18	∀ 34	2 50	B 66	P 82	β 98	ρ 114			⎩ 162	⊇ 178	≥ 194	® 210	∠ 226	⇐ 242
3	ETX 3	DC3 19	# 35	3 51	X 67	Σ 83	χ 99	σ 115			⎡ 163	⎛ 179	∂ 195	″ 211	⌠ 227	⇔ 243
4	EOT 4	DC4 20	∃ 36	4 52	Δ 68	T 84	δ 100	τ 116			⎪ 164		ℵ 196	ƒ 212		∨ 244
5	ENQ 5	NAK 21	% 37	5 53	E 69	Y 85	ε 101	υ 117			⎣ 165	♣ 181	′ 197	ℑ 213	⎨ 229	∑ 245
6	ACK 6	SYN 22	& 38	6 54	Φ 70	ς 86	φ 102	ϖ 118			⎩ 166	⊕ 182	ℜ 198	© 214	⎛ 230	TM 246
7	BEL 7	ETB 23	∋ 39	7 55	Γ 71	Ω 87	γ 103	ω 119			⎪ 167	⊗ 183	℘ 199	± 215	⟩ 231	⎪ 247
8	BS 8	CAN 24	(40	8 56	H 72	Ξ 88	η 104	ξ 120			⇑ 168	⊆ 184	∞ 200	→ 216		⎭ 248
9	HT 9	EM 25	) 41	9 57	I 73	Ψ 89	ι 105	ψ 121			⇒ 169	∪ 185	♠ 201	↑ 217	¬ 233	∅ 249
A	LF 10	SUB 26	* 42	: 58	ϑ 74	Z 90	φ 106	ζ 122			⇓ 170	— 186	∝ 202	≠ 218	∇ 234	∩ 250
B	VT 11	ESC 27	+ 43	; 59	K 75	[91	κ 107	{ 123			⊄ 171	… 187	• 203	≡ 219	⎡ 235	∈ 251
C	FF 12	FS 28	, 44	< 60	Λ 76	∴ 92	λ 108	| 124			⊃ 172	| 188	/ 204	° 220	| 236	© 252
D	CR 13	GS 29	− 45	= 61	M 77	] 93	μ 109	} 125			⎭ 173	∧ 189	♥ 205	↔ 221	⎫ 237	⊄ 253
E	SO 14	RS 30	. 46	> 62	N 78	⊥ 94	ν 110	∼ 126			| 174	↵ 190	× 206	⎤ 222	⎭ 238	⎫ 254
F	SI 15	US 31	/ 47	? 63	O 79	_ 95	ο 111				} 175	≈ 191	ϒ 207	∫ 223	÷ 239	⟨ 255

Table H-25
Ventura International

	0	1	2	3	4	5	6	7	8	9	A	B	C	D	E	F
0	NUL 0	DLE 16	SP 32	0 48	@ 64	P 80	‘ 96	p 112			„ 160	‰ 176	â 192	Å 208	Á 224	Œ 240
1	SOH 1	DC1 17	! 33	1 49	A 65	Q 81	a 97	q 113			À 161	“ 177	ê 193	î 209	Ã 225	œ 241
2	STX 2	DC2 18	" 34	2 50	B 66	R 82	b 98	r 114			Â 162	” 178	ô 194	Ø 210	ã 226	¶ 242
3	ETX	DC3	#	3	C	S	c	s			È	°	û	Æ		†

Table H-26
Ventura US

	0	1	2	3	4	5	6	7	8	9	A	B	C	D	E	F
0	NUL 0	DLE 16	SP 32	0 48	@ 64	P 80	‘ 96	p 112			” 160	‰ 176				
1	SOH 1	DC1 17	! 33	1 49	A 65	Q 81	a 97	q 113				“ 177				
2	STX 2	DC2 18	" 34	2 50	B 66	R 82	b 98	r 114				” 178				¶ 242
3	ETX 3	DC3 19	# 35	3 51	C 67	S 83	c 99	s 115				° 179				† 243
4	EOT 4	DC4 20	$ 36	4 52	D 68	T 84	d 100	t 116								‡ 244
5	ENQ 5	NAK 21	% 37	5 53	E 69	U 85	e 101	u 117								— 245
6	ACK 6	SYN 22	& 38	6 54	F 70	V 86	f 102	v 118								– 246
7	BEL 7	ETB 23	’ 39	7 55	G 71	W 87	g 103	w 119								
8	BS 8	CAN 24	(40	8 56	H 72	X 88	h 104	x 120			© 168					
9	HT 9	EM 25	) 41	9 57	I 73	Y 89	i 105	y 121			® 169					
A	LF 10	SUB 26	* 42	: 58	J 74	Z 90	j 106	z 122			TM 170					
B	VT 11	ESC 27	+ 43	; 59	K 75	[91	k 107	{ 123								
C	FF 12	FS 28	, 44	< 60	L 76	\ 92	l 108	| 124								• 252
D	CR 13	GS 29	– 45	= 61	M 77	] 93	m 109	} 125				§ 189				
E	SO 14	RS 30	. 46	> 62	N 78	^ 94	n 110	~ 126								
F	SI 15	US 31	/ 47	? 63	O 79	_ 95	o 111					¢ 191				… 255

Table H-27
PS Math

	0	1	2	3	4	5	6	7	8	9	A	B	C	D	E	F
0	NUL 0	DLE 16	SP 32	0 48	≅ 64	Π 80	‾ 96	π 112				° 176	ℵ 192	∠ 208	◇ 224	
1	SOH 1	DC1 17	! 33	1 49	Α 65	Θ 81	α 97	θ 113			ϒ 161	± 177	ℑ 193	∇ 209	⟨ 225	⟩ 241
2	STX 2	DC2 18	∀ 34	2 50	Β 66	Ρ 82	β 98	ρ 114			′ 162	″ 178	ℜ 194	® 210	® 226	∫ 242
3	ETX 3	DC3 19	# 35	3 51	Χ 67	Σ 83	χ 99	σ 115			≤ 163	≥ 179	℘ 195	© 211	© 227	⌠ 243
4	EOT 4	DC4 20	∃ 36	4 52	Δ 68	Τ 84	δ 100	τ 116			/ 164	× 180	⊗ 196	TM 212	TM 228	⎮ 244
5	ENQ 5	NAK 21	% 37	5 53	Ε 69	Υ 85	ε 101	υ 117			∞ 165	∝ 181	⊕ 197	∏ 213	∑ 229	⌡ 245
6	ACK 6	SYN 22	& 38	6 54	Φ 70	ς 86	φ 102	ϖ 118			ƒ 166	∂ 182	∅ 198	√ 214	⎛ 230	⎞ 246
7	BEL 7	ETB 23	∋ 39	7 55	Γ 71	Ω 87	γ 103	ω 119			♣ 167	• 183	∩ 199	· 215	⎜ 231	⎟ 247
8	BS 8	CAN 24	(40	8 56	Η 72	Ξ 88	η 104	ξ 120			♦ 168	÷ 184	∪ 200	¬ 216	⎝ 232	⎠ 248
9	HT 9	EM 25	) 41	9 57	Ι 73	Ψ 89	ι 105	ψ 121			♥ 169	≠ 185	⊃ 201	∧ 217	⎡ 233	⎤ 249
A	LF 10	SUB 26	* 42	: 58	ϑ 74	Ζ 90	φ 106	ζ 122			♠ 170	≡ 186	⊇ 202	∨ 218	⎢ 234	⎥ 250
B	VT 11	ESC 27	+ 43	; 59	Κ 75	[91	κ 107	{ 123			↔ 171	≈ 187	⊄ 203	⇔ 219	⎣ 235	⎦ 251
C	FF 12	FS 28	, 44	< 60	Λ 76	∴ 92	λ 108	| 124			← 172	… 188	⊂ 204	⇐ 220	⎧ 236	⎫ 252
D	CR 13	GS 29	− 45	= 61	Μ 77	] 93	μ 109	} 125			↑ 173	| 189	⊆ 205	⇑ 221	⎨ 237	⎬ 253
E	SO 14	RS 30	. 46	> 62	Ν 78	⊥ 94	ν 110	∼ 126			→ 174	— 190	∈ 206	⇒ 222	⎩ 238	⎭ 254
F	SI 15	US 31	/ 47	? 63	Ο 79	_ 95	ο 111				↓ 175	↵ 191	∉ 207	⇓ 223	⎪ 239	

Table H-28
PS Text

	0	1	2	3	4	5	6	7	8	9	A	B	C	D	E	F
0	NUL 0	DLE 16	SP 32	0 48	@ 64	P 80	‘ 96	p 112						— 208		
1	SOH 1	DC1 17	! 33	1 49	A 65	Q 81	a 97	q 113			¡ 161	– 177	` 193		Æ 225	æ 241
2	STX 2	DC2 18	" 34	2 50	B 66	R 82	b 98	r 114			¢ 162	† 178	´ 194			
3	ETX 3	DC3 19	# 35	3 51	C 67	S 83	c 99	s 115			£ 163	‡ 179	ˆ 195		a 227	
4	EOT 4	DC4 20	$ 36	4 52	D 68	T 84	d 100	t 116			/ 164	• 180	˜ 196			
5	ENQ 5	NAK 21	% 37	5 53	E 69	U 85	e 101	u 117			¥ 165		¯ 197			ı 245
6	ACK 6	SYN 22	& 38	6 54	F 70	V 86	f 102	v 118			ƒ 166	¶ 182	˘ 198			
7	BEL 7	ETB 23	’ 39	7 55	G 71	W 87	g 103	w 119			§ 167	• 183	˙ 199			
8	BS 8	CAN 24	(40	8 56	H 72	X 88	h 104	x 120			¤ 168	‚ 184	¨ 200		Ł 232	ł 248
9	HT 9	EM 25	) 41	9 57	I 73	Y 89	i 105	y 121			' 169	„ 185			Ø 233	ø 249
A	LF 10	SUB 26	* 42	: 58	J 74	Z 90	j 106	z 122			“ 170	” 186	° 202		Œ 234	œ 250
B	VT 11	ESC 27	+ 43	; 59	K 75	[91	k 107	{ 123			« 171	» 187	¸ 203		o 235	ß 251
C	FF 12	FS 28	, 44	< 60	L 76	\ 92	l 108	| 124			‹ 172	... 188				
D	CR 13	GS 29	– 45	= 61	M 77	] 93	m 109	} 125			› 173	‰ 189	˝ 205			
E	SO 14	RS 30	. 46	> 62	N 78	^ 94	n 110	~ 126			fı 174		˛ 206			
F	SI 15	US 31	/ 47	? 63	O 79	_ 95	o 111	127			fl 175	¿ 191	ˇ 207			

Table H-29
Math-8

	0	1	2	3	4	5	6	7	8	9	A	B	C	D	E	F
0	NUL 0	DLE 16	SP 32	0 48	∴ 64	Π 80	∵ 96	π 112			160	¯ 176	⊕ 192	Å 208	⌈ 224	⌉ 240
1	SOH 1	DC1 17	√ 33	1 49	A 65	P 81	α 97	ρ 113			↑ 161	∀ 177	⊙ 193	⊣ 209	⌊ 225	⌋ 241
2	STX 2	DC2 18	″ 34	2 50	B 66	Σ 82	β 98	σ 114			→ 162	∃ 178	⊗ 194	⊢ 210	⎛ 226	⎞ 242
3	ETX 3	DC3 19	° 35	3 51	Γ 67	T 83	γ 99	τ 115			↓ 163	⊤ 179	⊖ 195	⎣ 211	{ 227	} 243
4	EOT 4	DC4 20	∞ 36	4 52	Δ 68	ϒ 84	δ 100	υ 116			← 164	⊥ 180	⊘ 196	∋ 212	⎝ 228	⎠ 244
5	ENQ 5	NAK 21	÷ 37	5 53	E 69	Φ 85	ϵ 101	ϕ 117			⇑ 165	∪ 181	∧ 197	∫ 213	⎡ 229	⎤ 245
6	ACK 6	SYN 22	∝ 38	6 54	Z 70	X 86	ζ 102	χ 118			⇒ 166	∩ 182	∨ 198	∮ 214	⎢ 230	⎥ 246
7	BEL 7	ETB 23	′ 39	7 55	H 71	Ψ 87	η 103	ψ 119			⇓ 167	∈ 183	∨ 199	∠ 215	⎮ 231	⎦ 247
8	BS 8	CAN 24	(40	8 56	Θ 72	Ω 88	θ 104	ω 120			⇐ 168	∋ 184	¬ 200	∅ 216	⎲ 232	⎱ 248
9	HT 9	EM 25	) 41	9 57	I 73	∇ 89	ι 105	ϑ 121			↕ 169	∉ 185	∘ 201	א 217	‖ 233	⟩ 249
A	LF 10	SUB 26	× 42	e 58	K 74	∂ 90	κ 106	φ 122			↔ 170	⊂ 186	· 202	ב 218	∠ 234	⎭ 250
B	VT 11	ESC 27	+ 43	ε 59	Λ 75	ς 91	λ 107	ϖ 123			⇕ 171	⊃ 187	• 203	ג 219	/ 235	\ 251
C	FF 12	FS 28	, 44	< 60	M 76	≤ 92	μ 108	≃ 124			⇔ 172	⊄ 188	● 204	ℭ 220	— 236	⟨ 252
D	CR 13	GS 29	− 45	= 61	N 77	≠ 93	ν 109	≡ 125			⇄ 173	⊅ 189	○ 205	ℑ 221	═ 237	∓ 253
E	SO 14	RS 30	. 46	> 62	Ξ 78	≥ 94	ξ 110	≢ 126			⇆ 174	⊆ 190	† 206	ℜ 222	* 238	± 254
F	SI 15	US 31	/ 47	≈ 63	O 79	_ 95	o 111	▞ 127			⇀ 175	⊇ 191	‡ 207	ℨ 223	≅ 239	255

Table H-30
Microsoft Publishing

	0	1	2	3	4	5	6	7	8	9	A	B	C	D	E	F
0	NUL 0		SP 32		2 64		‘ 96					° 176			Ω 224	
1			1 33								′ 161	● 177	` 193	` 209		
2			” 34			₨ 82					″ 162	● 178	´ 194	´ 210		
3			3 35			Š 83	℅ 99	š 115			^ 163	● 179	^ 195	^ 211		
4			4 36			™ 84		Thin Space 116			~ 164	○ 180	~ 196	~ 212		
5			5 37									○ 181	¯ 197	¯ 213		1 245
6			7 38									○ 182	˘ 198	˘ 214	IJ 230	ij 246
7	BEL 7		’ 39									■ 183	˙ 199	˙ 215	L· 231	l· 247
8	BS 8		9 40									■ 184	¨ 200	¨ 216	Ł 232	ł 248
9	HT 9		0 41			Ÿ 89					fi 169	■ 185	201			
A	LF 10		8 42			Ž 90		ž 122			fl 170	□ 186	° 202	° 218		
B	VT 11	ESC 27	† 43								ff 171	□ 187	˚ 203	˚ 219		
C	FF 12		’ 44	” 60			ℓ 108				ffi 172	□ 188				
D	CR 13		— 45	‡ 61	— 77		Em Space 109				ffl 173	‰ 189	″ 205	″ 221		
E	SO 14		… 46		– 78	6 94	En Space 110	“ 126		Pt 158	‹ 174	◆ 190	˛ 206	˛ 222		
F	SI 15		/ 47		Œ 79	= 95	œ 111			*f* 159	› 175	◇ 191	ˇ 207	ˇ 223	’n 239	

Table H-31
Windows

	0	1	2	3	4	5	6	7	8	9	A	B	C	D	E	F
0	NUL 0		SP 32	0 48	@ 64	P 80	` 96	p 112				° 176	À 192	Ð 208	à 224	ð 240
1			! 33	1 49	A 65	Q 81	a 97	q 113		‘ 145	¡ 161	± 177	Á 193	Ñ 209	á 225	ñ 241
2			" 34	2 50	B 66	R 82	b 98	r 114		’ 146	¢ 162	² 178	Â 194	Ò 210	â 226	ò 242
3			# 35	3 51	C 67	S 83	c 99	s 115			£ 163	³ 179	Ã 195	Ó 211	ã 227	ó 243
4			$ 36	4 52	D 68	T 84	d 100	t 116			¤ 164	´ 180	Ä 196	Ô 212	ä 228	ô 244
5			% 37	5 53	E 69	U 85	e 101	u 117			¥ 165	µ 181	Å 197	Õ 213	å 229	õ 245
6	6		& 38	6 54	F 70	V 86	f 102	v 118			¦ 166	¶ 182	Æ 198	Ö 214	æ 230	ö 246
7	BEL 7		' 39	7 55	G 71	W 87	g 103	w 119			§ 167	· 183	Ç 199	× 215	ç 231	÷ 247
8	BS 8		(40	8 56	H 72	X 88	h 104	x 120			¨ 168	¸ 184	È 200	Ø 216	è 232	ø 248
9	HT 9		) 41	9 57	I 73	Y 89	i 105	y 121			© 169	¹ 185	É 201	Ù 217	é 233	ù 249
A	LF 10		* 42	: 58	J 74	Z 90	j 106	z 122			ª 170	º 186	Ê 202	Ú 218	ê 234	ú 250
B	VT 11	ESC 27	+ 43	; 59	K 75	[91	k 107	{ 123			« 171	» 187	Ë 203	Û 219	ë 235	û 251
C	FF 12		, 44	< 60	L 76	\ 92	l 108	| 124			¬ 172	¼ 188	Ì 204	Ü 220	ì 236	ü 252
D	CR 13		– 45	= 61	M 77	] 93	m 109	} 125			- 173	½ 189	Í 205	Ý 221	í 237	ý 253
E	SO 14		. 46	> 62	N 78	^ 94	n 110	~ 126			® 174	¾ 190	Î 206	Þ 222	î 238	þ 254
F	SI 15		/ 47	? 63	O 79	_ 95	o 111	▒ 127			¯ 175	¿ 191	Ï 207	ß 223	ï 239	ÿ 255

Table H-32
Desk Top

	0	1	2	3	4	5	6	7	8	9	A	B	C	D	E	F
0	NUL 0	DLE 16	SP 32	0 48	@ 64	P 80	‘ 96	p 112				“ 176	– 192	‹ 208	a 224	´ 240
1	SOH 1	DC1 17	! 33	1 49	A 65	Q 81	a 97	q 113			¶ 161	” 177	± 193	› 209	o 225	ˋ 241
2	STX 2	DC2 18	" 34	2 50	B 66	R 82	b 98	r 114			§ 162	µ 178	× 194	« 210	æ 226	ˆ 242
3	ETX 3	DC3 19	# 35	3 51	C 67	S 83	c 99	s 115			† 163	‰ 179	÷ 195	» 211	Æ 227	¨ 243
4	EOT 4	DC4 20	$ 36	4 52	D 68	T 84	d 100	t 116			‡ 164	• 180	° 196	‚ 212	ð 228	˜ 244
5	ENQ 5	NAK 21	% 37	5 53	E 69	U 85	e 101	u 117			© 165	• 181	ˊ 197	„ 213	Ð 229	ˇ 245
6	ACK 6	SYN 22	& 38	6 54	F 70	V 86	f 102	v 118			® 166	° 182	˝ 198	· 214	ij 230	˘ 246
7	BEL 7	ETB 23	’ 39	7 55	G 71	W 87	g 103	w 119			™ 167	○ 183	¼ 199	¡ 215	IJ 231	˝ 247
8	BS 8	CAN 24	(40	8 56	H 72	X 88	h 104	x 120			℅ 168	■ 184	½ 200	¿ 216	ł 232	° 248
9	HT 9	EM 25	) 41	9 57	I 73	Y 89	i 105	y 121			¢ 169	■ 185	¾ 201	Pt 217	Ł 233	· 249
A	LF 10	SUB 26	* 42	: 58	J 74	Z 90	j 106	z 122			– 170	□ 186	1 202	ℓ 218	œ 234	¯ 250
B	VT 11	ESC 27	+ 43	; 59	K 75	[91	k 107	{ 123			— 171	□ 187	2 203	£ 219	Œ 235	¸ 251
C	FF 12	FS 28	, 44	< 60	L 76	\ 92	l 108	| 124			... 172	' 188	3 204	¥ 220	ø 236	˛ 252
D	CR 13	GS 29	– 45	= 61	M 77	] 93	m 109	} 125			fi 173	¬ 189	/ 205	¤ 221	Ø 237	˙ 253
E	SO 14	RS 30	. 46	> 62	N 78	^ 94	n 110	~ 126			fl 174	| 190		ƒ 222	þ 238	1 254
F	SI 15	US 31	/ 47	? 63	O 79	_ 95	o 111	▒ 127				═ 191		ß 223	Þ 239	

Table H-33
Pi Font

	0	1	2	3	4	5	6	7	8	9	A	B	C	D	E	F
0	NUL 0	DLE 16	SP 32	¯ 48	∷ 64	℘ 80	⌜ 96	⌝ 112								
1	SOH 1	DC1 17		˘ 49	∆ 65	℘ 81	⌞ 97	⌟ 113								
2	STX 2	DC2 18	” 34	ˇ 50		℞ 82	⌜ 98	⌝ 114								
3	ETX 3	DC3 19	’ 35	• 51		Σ 83	⌞ 99	⌟ 115								
4	EOT 4	DC4 20	“ 36	↗ 52			┼ 100	┬ 116								
5	ENQ 5	NAK 21	” 37	↘ 53			├ 101	┤ 117								
6	ACK 6	SYN 22	‘ 38	↙ 54	ƒ 70		═ 102	┴ 118								
7	BEL 7	ETB 23	’ 39	↖ 55			╫ 103	│ 119								
8	BS 8	CAN 24	⟨ 40	∆ 56	ℏ 72		∪ 104	⊔ 120								
9	HT 9	EM 25	⟩ 41	▷ 57			∩ 105	⊓ 121								
A	LF 10	SUB 26	TM 42	∇ 58			╓ 106	╖ 122								
B	VT 11	ESC 27	SM 43	◁ 59		⟦ 91	╙ 107	╜ 123								
C	FF 12	FS 28	® 44	⪡ 60	ℒ 76	‖ 92	□ 108	■ 124								
D	CR 13	GS 29	© 45	§ 61	ℓ 77	⟧ 93	◇ 109	◆ 125								
E	SO 14	RS 30	℗ 46	⪢ 62		‹ 94										
F	SI 15	US 31		¶ 63		› 95		▒ 127								

PCL 5 COMMAND SET QUICK REFERENCE

The 4219/MRP and 4215/MRP support the Hewlett-Packard PCL 5 commands listed in the following tables. For detailed explanation on how to use these commands, refer to the *PCL 5 Printer Language Technical Reference Manual* published by Hewlett-Packard. For information on PCL 5 commands that differ or are specific to the 4219/MRP and 4215/MRP, you can order the *Xerox 4220 LPS Printer Language Reference PCL 5 and*

Table I-1
Job Control Commands

Syntax	**Name**	**# Value**
Esc E	Printer Reset	
Esc & #X	Number of Copies	Number of copies to print between 1 and 32767.
Esc & #S	Simplex/Duplex Print	0 Simplex 1 Duplex, ignored 2 Duplex, ignored
Esc & #U	Left Offset	Number of decipoints (1/720 inch)
Esc & #Z	Top Offset	Number of decipoints (1/720 inch)
Esc %—12345X	Universal Exit Language/Start PJL	

Table I-2
Page Control Commands

Syntax	Name	# Value
Esc & #H	Paper Source	0 Print page from current tray 1 Feed paper from Upper Tray 2 Feed paper from Manual Feed Tray 3 Feed envelope from Manual Feed Tray
Esc & #O	Page Orientation	0 Portrait 1 Landscape 2 Reverse Portrait 3 Reverse Landscape
Esc &a#P	Print Direction	Degrees of rotation (0, 90, 180,
Esc &a#G	Page Side Selection	Ignored
Esc & #G	Page Destination	Only one output bin, ignored.

Continued

Table I-2
Page Control Commands

Syntax	Name	# Value
Esc & #A	Page Size	2 Letter (8.5 x 11 in.) 3 Legal (8.5 x 14 in.) 1 Executive (7.25 x 10.5 in.) 26 A4 (210 x 297 mm) 81 Comm Envelope 10 (4.125 x 9.5 in.) 90 International DL (110 x 220
Esc & #P	Page Length	Number of lines on the page based on current line spacing.
Esc &a#L	Left Margin	Column number at which printing
Esc &a#M	Right Margin	Column number at the end of the
Esc 9	Clear Horizontal	
Esc & #E	Top Margin	Number of the line on which text
Esc & #F	Text Length	Number of lines of text required.
Esc & #L	Perforation Skip	0 Disable 1 Enable (moves text to top of
Esc &k#H	Horizontal Motion Index (HMI)	Width of a column in units of 1/120th of an inch. # must be
Esc & #C	Vertical Motion Index	Distance between rows in 1/48ths of an inch. # must be between 0
Esc & #D	Line Spacing	1, 2, 3, 4, 6, 8, 12, 16, 24, or

Table I-3
Cursor Positioning Commands

Syntax	Name	# Value
Esc &a#C	Horizontal Cursor Position (Columns)	Number of columns to move or the column to move to.
Esc &a#H	Horizontal Cursor Position (Decipoints)	Number of decipoints (1/720th of an inch) to move or the absolute
Esc *p#X	Horizontal Cursor Position (Dots)	Integer representing the number of dots (1/300th of an inch) to move or the absolute position to
Esc &a#R	Vertical Cursor Position (Rows)	Represents the number of rows to move or the row to move to.
Esc &a#V	Vertical Cursor Position (Decipoints)	Represents the number of decipoints (1/720th of an inch) to move or the absolute position
Esc *p#Y	Vertical Cursor Position (Dots)	Integer representing the number of dots (1/300th of an inch) to move or the absolute position to

Continued

Table I-3
Cursor Positioning Commands

Syntax	Name	#	Value	
Esc =	Half-Line Feed			
Esc &k#G	Line Termination			
			HOST	**PRINTER**
		0	CR	CR
			LF	LF
			FF	FF
		1	CR	CR+LF
			LF	LF
			FF	FF
		2	CR	CR
			LF	CR + LF
			FF	CR + LF
		3	CR	CR + LF
			LF	CR + LF
			FF	CR + FF
Esc &s#C	End-of-Line Wrap	0	Enable	
		1	Disable	
Esc &f#S	Push/Pop Cursor	0	Push (store cursor position)	
		1	Pop (recall cursor position)	

Table I-4
Raster Graphics Commands

Syntax	Name	# Value
Esc *t#R	Graphics Resolution	75 75 dots per inch 100 100 dots per inch 150 150 dots per inch 300 300 dots per inch
Esc *r#F	Graphics Presentation	0 image printed in current print direction 3 image printed along width of
Esc *r#T	Raster Height	Height in raster rows.
Esc *r#S	Raster Width	Width in pixels of the specified
Esc *r#A	Start Graphics	0 Left edge of printable area 1 Current cursor position
Esc *b#Y	Y Offset	Number of raster lines of
Esc *b#M	Set Compression	0 Unencoded 1 Run-length encoding 2 Tagged Image File Format (TIFF) encoding
Esc *b#W [raster	Transfer Raster Data	Number of bytes in this row. (Do not enter the brackets.) 0
Esc *rC **Esc *rB**	End Graphics	

Table I-5
Font Commands

Syntax	Name	ID Value	
Esc (ID	Primary Symbol Set	7J	Desktop
		0N	ECMA-94 Latin 1
Esc)ID	Secondary Symbol Set	2U	ISO-2 International Reference Version
		1E	ISO-4 UK
		0U	ISO-6 ASCII
		3S	ISO-10 Swedish
		0S	ISO-11 Swedish
		0K	ISO-14 JIS ASCII
		0I	ISO-15 Italian
		4S	ISO-16 Portuguese
		2S	ISO-17 Spanish
		1G	ISO-21 German
		0F	ISO-25 French
		2K	ISO-57 Chinese
		0D	ISO-60 Danish/Norwegian
		1D	ISO-61 Norwegian
		1F	ISO-69 French
		5S	ISO-84 Portuguese
		6S	ISO-85 Spanish
		1U	Legal
		8M	Math-8
		6J	Microsoft Publishing
		10U	PC-8 US
		11U	PC-8 Danish/Norwegian
		12U	PC-850
		15U	Pi Font
		5M	PS-Math
		10J	PS-Text
		8U	Roman-8
		6M	Ventura Math
		13J	Ventura International
		14J	Ventura US

Continued

Table I-5
Font Commands

Syntax	Name	# Value
Esc (s#P	Primary Spacing	0 fixed pitch 1 proportional spacing
Esc)s#P	Secondary Spacing	
Esc (s#H	Primary Pitch	Real number valid up to two
Esc)s#H	Secondary Pitch	
Esc (s#V	Primary Height	Selected height in points (72nds of an inch) up to two decimal
Esc)s#V	Secondary Height	
Esc (s#S	Primary Style	0 Upright 1 Italic 4 Condensed 5 Condensed Italic 8 Compressed, Extra Condensed 24 Expanded 32 Outline 64 Inline 128 Shadowed 160 Outline Shadowed
Esc)s#S	Secondary Style	

Continued

Table I-5
Font Commands

Syntax	Name	# Value
Esc (s#B	Primary Stroke Weight	-7 Ultra Thin
		-6 Extra Thin
Esc)s#B	Secondary Stroke	-5 Thin
		-4 Extra Light
		-3 Light
		-2 Demi Light
		-1 Semi Light
		0 Medium
		+1 Semi Bold
		+2 Demi Bold
		+3 Bold
		+4 Extra Bold
		+5 Black
		+6 Extra Black
		+7 Ultra Black
Esc (s#T	Primary Font	3 Courier
		0 Line Printer
Esc)s#T	Secondary Font	4101 Times
		4148 Univers
Esc (3@	Primary Default Font	
Esc)3@	Secondary Default	

Continued

Table I-5
Font Commands

Syntax	Name	# Value
Esc &p#X [transparent data]	Transparent Data	Number of bytes of transparent data. (The brackets are not to be typed in.) 0 through 32767
Esc &d#D	Underline	0 fixed underline 3 floating underline
Esc &d@	Underline Off	
Esc *c#D	Font ID	ID number ranging from 0 to
Esc *c#F	Font Control	0 Delete all soft fonts 1 Delete all temporary soft fonts 2 Delete downloaded font specified by last font ID command 3 Delete character code 4 Make downloaded font specified by last font ID command temporary 5 Make downloaded font specified

Continued

Table I-5
Font Commands

Syntax	Name	# Value
Esc (#X **Esc)#X**	Primary Font Selection by ID Secondary Font	Font ID number.
Esc)s#W [font descriptor + data]	Font Descriptor	Number of bytes in the font descriptor that follows. (The brackets are not to be entered.)
Esc *c#E	Character Code	Single-byte decimal character
Esc (s#W [character descripto	Character Descriptor and Data	Number of bytes (up to 32767) in the character descriptor and data following the command. (Do not

Table I-6
Macro Commands

Syntax	Name	# Value
Esc &f#Y	Macro ID	Value of the macro ID number used. The ID number may be in the
Esc &f#X	Macro Control	0 Start macro definition (last ID specified) 1 Stop macro definition 2 Execute macro (last ID specified) 3 Call macro (last ID specified) 4 Enable auto-overlay macro (last ID specified) 5 Stop auto-overlay 6 Delete all macros 7 Delete all temporary macros 8 Delete macro (last ID

Table I-7
Rectangular Area Fill Commands

Syntax	Name	# Value
Esc *c#G	Area Fill ID	Six fill patterns and eight densities of shading. Each of the fill patterns is identified by a number between 1 and 6. Each shading density covers a range of
Esc *c#P	Fill Rectangular Area	0 Solid black fill 1 Solid white fill 2 Shading 3 Cross-hatch pattern 5 Current pattern
Esc *c#H	Horizontal Rectangle Size (Decipoints)	Number up to four decimal places representing the width of the rectangle in decipoints (720ths
Esc *c#A	Horizontal Rectangle Size (Dots)	Integer representing the width of the rectangle in dots (300ths of
Esc *c#V	Vertical Rectangle Size (Decipoints)	Number up to four decimal places representing the height of the rectangle in decipoints (720th of
Esc *c#B	Vertical Rectangle	Integer representing the height of the rectangle in dots (300ths

Table I-8
Print Model Commands

Syntax	Name	# Value
Esc *v#N	Source Transparency	0 Transparent 1 Opaque
Esc *v#O	Pattern Transparency	0 Transparent 1 Opaque
Esc *c#G	Area Fill ID	Shaded Fill 1 through 100 = 1% through 100%.
Esc *v#T	Select Current	0 Solid black 1 Solid white 2 Shading pattern 3 Cross-hatch pattern

Table I-9
Picture Frame Commands

Syntax	Name	# Value
Esc *c#X	Picture Frame Horizontal Size	Horizontal size in decipoints.
Esc *c#Y	Picture Frame Vertical Size	Vertical size in decipoints.
Esc *c0T	Set Picture Frame Anchor Point	

Table I-10
HP-GL/2 Configuration Group Commands

Syntax	Name	Values
Esc *c#K	HP-GL/2 Plot	Horizontal size in inches.
Esc *c#L	HP-GL/2 Plot Vertical	Vertical size in inches.
Esc %#B	HP-GL/2 Mode	0 Use previous HP-GL/2 pen position 1 Use current PCL cursor
Esc %#A	Enter PCL Mode	0 Return cursor to previous PCL position 1 Use current HP-GL/2 pen
DF [;]	Default Values	
IN [;]	Initialize	
IP [X_{P1},Y_{P1} [,X_{P2},Y_{P2} ;]] or	Input P1 and P2	X_{P1}, Y_{P1} = P1 location coordinates
IR [X_{P1},Y_{P1}[X_{P2},Y_{P2}]] or **IR [;]**	Input Relative P1 and	X_{P1}, Y_{P1} = P1 location as percentage of PCL Picture Frame X_{P2}, Y_{P2} = P2 location as percentage of PCL Picture Frame

Continued

Table I-10
HP-GL/2 Configuration Group Commands

Syntax	Name	Values
IW [X_{LL}, Y_{LL}, X_{UR}, Y_{UR}] [;] or	Input Window	X_{LL} X coordinate (lower left) Y_{LL} Y coordinate (lower left) X_{UR} X coordinate (upper right) Y_{UR} Y coordinate (upper right)
RO angle[;] or **RO [;]**	Rotate Coordinate	Angle is 0°, 90°, 180°, or 270°
SC [X_1, X_2, Y_1, Y_2[,type[,left,bot tom]]][;] or **SC X_{MIN}, X_{FACTOR}, Y_{MIN}, Y_{FACTOR},**	Scale	X_1, Y_1 User-unit coordinates for P_1 X_2, Y_2 User-unit coordinates for P_2 type 0 (anisotropic) 1 (isotropic), or 2 (point factor) left, bottom Positions the isometric area within P1/P2

Table I-11
HP-GL/2 Vector Group Commands

Syntax	Name	Values	
AA X_{CTR},Y_{CTR}, sweep angle[,chord	Arc Absolute	X_{CTR}, Y_{CTR} sweep angle chord angle	-2^{30} to 2^{30} - 1 -32768 to 32767 0.5 to 180
AR X_{INCR},Y_{INCR},sweep angle[,chord	Arc Relative	X_{INCR}, Y_{INCR} sweep angle chord angle	-2^{30} to 2^{30} - 1 -32768 to 32767 0.5 to 180
AT X_{INTER}, Y_{INTER},X_{END},	Absolute Arc Three	X_{INTER}, Y_{INTER} X_{END}, Y_{END} chord angle	-2^{30} to 2^{30} - 1 -2^{30} to 2^{30} - 1 0.5 to 180
CI radius [,chord angle][;]	Circle	radius chord angle	-2^{30} to 2^{30} - 1 0.5 to 180
PA [X,Y...[,X,Y]][;]	Plot Absolute	-2^{30} to 2^{30} - 1	
PD [X,Y...[,X,Y]][;]	Pen Down	-2^{30} to 2^{30} - 1	
PE [flag][val] | coord pair...[flag] [val] | coord pair [;]	Polyline Encoded	Encodes common HP-GL/2 commands to increase throughput. Flag is: < Pen up > Fractional data = Absolute 7 7-bit data : Select pen Coord pair is -2^{30} to 2^{30} - 1 Val is flag dependent	

Continued

Table I-11
HP-GL/2 Vector Group Commands

Syntax	Name	Values
PR [X,Y...[, X,Y]][;]	Plot Relative	-2^{30} to $2^{30} - 1$
PU [X,Y...[, X,Y]][;]	Pen Up	-2^{30} to $2^{30} - 1$
RT $X_{INCR\ INTER}$, $Y_{INCR\ INTER}$, $X_{INCR\ END}$, Y_{INCR}	Relative Arc Three	$X_{INCR\ INTER}$, $Y_{INCR\ INTER}$ -2^{30} to $2^{30} - 1$ $X_{INCR\ END}$, $Y_{INCR\ END}$ -2^{30} to

Table I-12
HP-GL/2 Polygon Group Commands

Syntax	Name	Values
EA X,Y[;]	Edge Rectangle	X,Y are the coordinates of the opposite corner of the rectangle.
ER X,Y[;]	Edge Rectangle	X,Y are the coordinates of the opposite corner of the rectangle.
EW radius,start angle, sweep angle, [,chord	Edge Wedge	radius -2^{30} to 2^{30} - 1 start angle -32768 to 32767 sweep angle ± 360 chord angle 0.5 to 180
EP [;]	Edge Polygon	
FP [;]	Fill Polygon	
PM polygon	Polygon Mode	0 Clears polygon buffer and enters polygon mode 1 Closes current polygon or subpolygon and remains in polygon mode 2 Closes current polygon or
RA X,Y[;]	Fill Rectangle	X,Y are the coordinates of the opposite corner of the rectangle.
RR X,Y[;]	Fill Rectangle	X,Y are the coordinates of the opposite corner of the rectangle.
WG radius,start angle, sweep angle	Fill Wedge	radius -2^{30} to 2^{30} - 1 start angle -32768 to 32767 sweep angle ± 360 chord angle 0.5 to 180

Table I-13
HP-GL/2 Line and Fill Attributes Group Commands

Syntax	Name	Values	
AC	Anchor Corner	Determines the starting point for	
FT [fill type[,option1[,option2]]][;	Fill Type	Fill Type	Description, option1, option2
		1 and 2	Solid black, ignored, ignored
		3	Hatched (parallel lines), line spacing, angle
		4	Cross-hatched, line spacing, angle
		10	Shading, %shading, ignored
		11	User-defined, raster-
LA [kind, value... [,kind, value]][;	Line Attributes	Attribute	Kind, Value—Description
		Line Ends	1, 1—Butt (default) 2—Square 3—Triangular 4—Round
		Line Joins	2,1—Mitered (default) 2—Mitered/beveled 3—Triangular 4—Round 5—Beveled 6—No join applied
		Miter Limit	3, 1 to 32,767—Max. length of miter (miter

Continued

Table I-13
HP-GL/2 Line and Fill Attributes Group Commands

Syntax	Name	Values
LT [line type [,pattern length	Line Type	line type -8 to 8 pattern length >0 Mode is: 0 (relative)—Interprets pattern length as percentage of diagonal distance between P1 and P2 1 (absolute)—Interprets the
PW [width [,pen]][;	Pen Width	width -32768 to 32767 pen 0 (white), 1 (black)
RF [index [,width, height, pen number [,...pen	Raster Fill	index 1 to 8 width 1 to 255 height 1 to 255 pen number 0 (white), 1
SM [character]	Symbol Mode	
SP	Select Pen	Pen is: 0 (white) 1 (black)
SV [screen type[,option1[,option2]]][;	Screened Vectors	**Screen Description** **Type** **Option 1** **Option 2**

Continued

Table I-13
HP-GL/2 Line and Fill Attributes Group Commands

Syntax	Name	Values
TR [n][;]	Transparency Mode	n is: 0 (Transparency mode= off) 1 (Transparency
UL [index[,gap1...gap	User Defined Line	index Line pattern number [1-8] gap Percentage of pattern length for that portion (first gap is a pen-down
WU	Pen Width Unit	type is: 0 (millimeters) 1 (percentage of P1/P2 distance)

Table I-14
HP-GL/2 Character Group Commands

Syntax	Name	Value
AD [kind, value... [,kind, value]][;	Alternate Font	**Kind** **Attribute** **Value** 1 Symbol Set 2 Font Spacing 0 (fixed); 1 (prop.) 3 Pitch characters per inch 4 Height font point size 5 Posture 0 (upright); 1
CF [fill mode[,edge	Character Fill Mode	Fill mode is: 0 (solid fill and edged) 1 (edging with specified pen [or current pen if edge pen parameter not specified]; characters filled if can’t be edged) 2 (fill with current fill type; characters are not edged) 3 (fill with current fill type; edge characters with the specified pen or current pen if edge pen parameter is not
CP [spaces,	Character Plot	Spaces is: -32768 to 32767 Lines is: -32768 to 32767

Continued

Table I-14
HP-GL/2 Character Group Commands

Syntax	Name	Values
DI [run,rise	Absolute Label	run X - component of the label direction or COSINE of the angle rise Y - component of the
DR [run,rise	Relative Label	run percentage of distance between P1X and P2X rise percentage of distance between P1Y and P2Y
DT [lblterm	Define Label	lblterm any character except: NULL, LF, Esc, and ; (semicolon) mode 0 print label
DV [path[,line]]	Define Variable Text	path: 0 0 degrees—right 1 -90 degrees—down 2 -180 degrees—left 3 -270 degrees—up line: 0 -90 degrees—normal line feed 1 +90 degrees—reverse line feed

Continued

Table I-14
HP-GL/2 Character Group Commands

Syntax	Name	Values
ES [width [,height]	Extra Space	width number (or fractional number) of spaces between characters height number (or fractional
FI font	Select Primary Font	Font ID number assigned in PCL mode.
FN font	Select Secondary Font	Font ID number assigned in PCL
LB text...text	Label	text...text is any characters. lblterm is label terminator (default Ext or defined with DT
LO [position	Label Origin	Position is number indicating label position relative to

Continued

Table I-14
HP-GL/2 Character Group Commands

Syntax	Name	Values
SA [;]	Select Alternate Font	Selects the font designated by
SB [n]	Scalable or Bitmap	n is: 0 Scalable fonts 1 Bitmap and scalable fonts
SD [kind, value... [,kind, value]][;	Standard Font	**Kind Attribute Value** 1 Symbol Set 2 Font Spacing (fixed); 1 (prop.) 3 Pitch characters per inch 4 Height font point size 5 Posture 0 (upright); 1
SI [width,	Absolute Character	width -32768 to 32767 height -32768 to 32767
SL [tangent	Character Slant	Tangent of angle is -32768 to
SR [width,	Relative Character	width -32768 to 32767 height -32768 to 32767
SS [;]	Select Standard Font	
TD [mode][;]	Transparent Data	Mode is: 0 Normal 1 Transparent

Table I-15
PJL Commands

Syntax	Name	Values
Esc%—12345X	Universal Exit Language/Start PJL	
@PJL ENTER LANGUAGE={language} [<CR>]<LF	Enter Language	Where language is PCL or
@PCL COMMENT <Words>[<CR>] <LF>	Comment	

Table I-16
Miscellaneous Commands

Syntax	Name	Values
Esc Y	Enable Display Functions mode	
Esc Z	Disable Display Functions Mode	

GLOSSARY

A

access	To find area of memory or auxiliary storage for retrieving or storing information.
alignment	The relationship between the bottom edge of a character and the bottom edge of its adjacent right character.
APL	A Programming Language. Also refers to a symbol set. Fonts for the APL symbol set can be found in the Coax printer.
AppleTalk	Refers to the Apple Macintosh standard communication protocol.
application	A software program or group of programs for solving common business tasks.
ASCII	American Standard Code for Information Interchange. A digital coding system used to represent characters or control functions electronically, each character being represented by either seven or eight bits.
asynchronous	In reference to communications, a protocol in which data bytes are framed by special start- and stop-bits, enabling varying rates of

byte	Unit of seven or eight consecutive bits (the smallest unit of information) used to represent a character or control function.

C

carriage return	<CR> A control character that (unless set to be interpreted as a line end) causes the printer to begin printing at the left margin of the current line.
character cell	The digitized space containing a single character of a font set.
character set	The collection of characters contained in a font. Each character set has been designed for a special purpose. Some sets include all printable characters found on most standard computer keyboards, while others are intended for such applications as math, foreign language typesetting, and law. Also see “symbol set.”
coaxial cable	PVC or teflon shielded R662 cable, used for connection to IBM communication controllers.
configuration	Configuration is the process of changing certain printer settings to allow your computer to communicate properly with the printer. The printer is configured using one of the

D

data dump	A data-analyzing tool that prints the hexadecimal value of all data received.
default	A printer setting that is used in place of a software application selection is called a default.
diagnostics	Software designed to verify the operation of the system hardware and to identify failures.
dimension	The shape of a character measured within the space that it occupies.
document	One or more recorded or printed pages forming a logical whole.
dot	A unit of measurement representing the smallest printable element, also referred to as “spots” or PELs (Picture Elements).
downloaded fonts	These are fonts loaded from the host system into the dynamic memory of the printer. Downloaded fonts must be reloaded each time the system is powered up.
downloading	Downloading refers to the process of transferring fonts or forms from the computer to the printer’s memory. These transferred fonts or forms can be stored in the printer until it is

embedded commands	Control codes within the text of a file.
emulation	Emulation is when one device is set up to perform like a different device.
error messages	These are control panel display messages that are shown when the printer has encountered some difficulty.
escape character	A control code, or control character, represented by ASCII 1B, decimal 27, which must be placed in front of a printer command.
escape sequence	A sequence of characters beginning with an escape code and comprising a printer command.

F

Face-up Output Tray	This is a special printer feature that allows the paper to exit the printer, printed side facing up. The Face-up Output Tray is installed directly above the upper paper tray. This is a useful feature when using the manual feed tray for printing on heavy stock or envelopes, since it is a straight paper path from manual feed tray to the Face-up Output Tray.
factory default	Factory defaults refer to the settings

font characteristics	Font characteristics determine what a printed font looks like. These characteristics include orientation, character height, style, stroke weight, and typeface.
form feed	A control character that causes the printer to print the current page and to be ready for the next page.
FSL	Function Selection via Line. FSL commands are used to set certain printer features. Refer to the *Xerox Twinax Command Reference* or the *Xerox Coax Command Reference*.
fuser roller	The fuser roller in your printer is used to bond toner to the page.

G

Graphical Data Display Manager (GDDM)	A function of the operating system that processes both text and graphics for output on a display, printer, or plotter.
grams per square meter (gsm)	Universally accepted unit that expresses the weight in grams of one square meter of paper.

H

handshaking	An exchange of signals between two devices in a computer network, prior to the transfer of data. The purpose

host	The source of data, or the input device, for the printer. Usually a personal computer.
HP-GL/2	An industry standard language for pen plotters that is integrated into the PCL 5 printer language. Allows drawing of vector (line) drawings, such as circles and rectangles.

I

I/F	Interface
Intelligent Printer Data Stream (IPDS)	An all points addressable data system that allows users to position text, images, and graphics at any defined point on a printed page.
interface	The connection between two devices. Interfaces are meant to carry electronic impulses from one place to another. Hardware interfaces, for instance, link a host computer to a printer.
internal fonts	Permanent landscape and portrait fonts that reside in the printer and are not affected when the printer is powered up or down.
I/O	Input/Output; the communication between the printer and a host

L

landscape	Landscape orientation refers to printing across the length of the page (as opposed to portrait orientation, which prints across the width of the page). The term “landscape” is derived from pictures of landscape, which are usually horizontal in format. See “orientation” for an illustration.
line feed	A control character that causes the printer to begin printing in the current character position of the next line.
LU1	Logical Unit 1. An SCS device.

M

menu	Menus list items presented for selection from the printer’s control panel. The printer has a main menu, the Control Panel Main Menu, and two lower level menus: the Printer Setup Menu and the Interface Setup Menu.
memory	The space in a device where information is kept, or the ability of a device to keep information until needed.
modem	See modulator/demodulator.

online — When the printer is online, it is able to print pages. The printer is placed online from another mode, such as offline or menu, when the **Online** key is pressed.

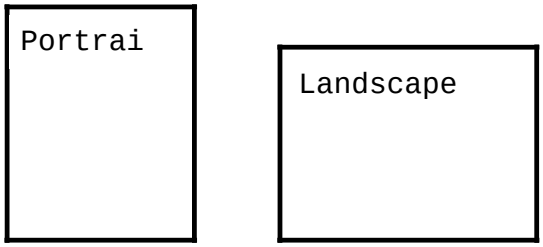

output tray — The paper output tray is located on the top cover of the printer and is the place where printed material is delivered face down.

P

page description language (PDL) — Language used to describe printing jobs to a printing system. PDL describes the input (type, format, characteristics), performs the processing functions (logical processing), and describes the output (type format, font selection, accounting options).

page ends — An instruction (e.g., form feed) to terminate the current page.

page orientation — Direction in which data is printed on a page. Refer to *landscape* and *portrait.*

paper jam	When paper gets stuck somewhere along the paper path, this is referred to as a paper jam.
parallel interface	A type of interface in which data is transmitted and received in bytes rather than bits. Used for local printing over short distances (10 meters or less).
parallel/serial ports	The printer comes with two interface connectors, serial and parallel, located on the lower part of the back panel. The cable that attaches your computer and printer is connected here.
parity	Parity is the addition of one or more redundant bits of information used to verify data accuracy. For example, in ASCII code, seven bits are used to represent the value of a character and the eighth bit is for parity. If even parity is to be used, there must be an even number of 1 bits in the character; thus, if the information bits contain an odd number of 1 bits, the parity bit is set at 1, otherwise, it is left as 0. If parity is used in the transmission of data, both the computer and the printer must calculate parity in the same way. The printer receiving information compares its parity calculations with those transmitted by the sending computer.

polarity	The direction of flow of an electrical current (positive or negative).
port	A communications connection from a computer to the printer, suitable for attaching a single line.
portrait	Portrait refers to printing across the width of a page (letter style). This is the opposite of landscape orientation, which is printing across the length of the page. The term portrait is derived from portraits of people, which are usually vertical in format. See “orientation” for an illustration.
print	To produce a paper document using data received from a host.
print density	Print density refers to the relative darkness of print on the page. Very dense print appears totally black. Less dense print looks lighter, and solid filled areas may not be totally black. You can adjust print density in the printer.
printer commands	Printer commands are sent to the printer through application software programs and are used to change printing variables such as page

R

RAM	Random Access Memory.
resident fonts	Resident fonts are the fonts resident in the printer when shipped. The printer’s resident fonts are also called internal fonts.
restart	To resume a print job run from a point where it was aborted.
robust	An asynchronous protocol using the XON/XOFF handshake. It is different from normal XON/XOFF, because in the Robust protocol an XON is sent every one second by the printer and XOFF is only sent when the printer experiences a buffer full and cannot receive any more data. The normal XON/XOFF handshake operates similarly to Robust, but the printer only sends an XON after a printer problem has been corrected (printer not busy), or initially when the printer is powered on and is ready (operational). XOFF operates the same in both environments.
ROM	Read Only Memory.

S

scalable font	A font scaled within the printer to

SNA	Systems Network Architecture. Defines message formats and protocols for IBM network communications.
soft font	Soft fonts are fonts stored on diskettes. These fonts can be transferred to the printer’s memory from the host computer.
software	Software refers to any word processing, programming or special application package that is installed in your computer system.
spot	A unit of measurement representing 1/300 inch (also referred to as “dots”).
status message	These are control panel display messages that keep you informed of the printer’s current operating condition.
storage	Space in memory where information is held for later use.
style	Distinctive quality, form, and manner of oral or written expression, related to spelling, punctuation, capitalization, and typographic arrangement and display.
subscript	Any letter or symbol printed below and to the side of another character.
superscript	Any letter or symbol printed above and

toner	Toner is a fine powdered substance used in the printing process. The toner supply for the system is contained inside the disposable toner cartridge.
toner cartridge	The toner cartridge contains a photosensitive “print drum” used in the printing process. The cartridge is disposable.
troubleshooting	Troubleshooting refers to the process of pin-pointing the cause of a printer problem. The method used here is to step through a list of symptoms and suggested remedies until the solution is found.
twinax	Short for twinaxial cable. A special type of communications cable used to connect to IBM AS/400 or System/36 and System/38 systems.
typeface	1. All type of a single design. 2. Set of characters with design features that make them similar to one another.

INDEX

A

B

C

E

I

J

K

L

N

O

T

U

W

X